STM32H757xI

Dual 32-bit Arm® Cortex®-M7 up to 480MHz and -M4 MCUs, 2MB flash, 1MB RAM, 46 com. and analog interfaces, SMPS, DSI, crypto

Datasheet - production data

Features

Includes ST state-of-the-art patented technology

Dual core

- 32-bit Arm® Cortex®-M7 core with double-precision FPU and L1 cache: 16 Kbytes of data and 16 Kbytes of instruction cache; frequency up to 480 MHz, MPU, 1027 DMIPS/ 2.14 DMIPS/MHz (Dhrystone 2.1), and DSP instructions
- 32-bit Arm® 32-bit Cortex®-M4 core with FPU, Adaptive real-time accelerator (ART Accelerator) for internal flash memory and external memories, frequency up to 240 MHz, MPU, 300 DMIPS/1.25 DMIPS /MHz (Dhrystone 2.1), and DSP instructions

Memories

- 2 Mbytes of flash memory with read-while-write support
- 1 Mbyte of RAM: 192 Kbytes of TCM RAM (inc. 64 Kbytes of ITCM RAM + 128 Kbytes of DTCM RAM for time critical routines), 864 Kbytes of user SRAM, and 4 Kbytes of SRAM in Backup domain
- Dual mode Quad-SPI memory interface running up to 133 MHz
- Flexible external memory controller with up to 32-bit data bus: SRAM, PSRAM, SDRAM/LPSDR SDRAM, NOR/NAND flash memory clocked up to 125 MHz in Synchronous mode
- CRC calculation unit

Security

- ROP, PC-ROP, active tamper, secure firmware upgrade support, Secure access mode

General-purpose input/outputs

- Up to 168 I/O ports with interrupt capability

LQFP176 (24x24 mm)
LQFP208 (28x28 mm)

UFBGA169 (7 × 7 mm)
TFBGA240+25 (14x14 mm)

WLCSP156 (4.96x4.64 mm)

Reset and power management

- 3 separate power domains which can be independently clock-gated or switched off:
  - D1: high-performance capabilities
  - D2: communication peripherals and timers
  - D3: reset/clock control/power management
- 1.62 to 3.6 V application supply and I/Os
- POR, PDR, PVD and BOR
- Dedicated USB power embedding a 3.3 V internal regulator to supply the internal PHYs
- Embedded regulator (LDO) to supply the digital circuitry
- High power-efficiency SMPS step-down converter regulator to directly supply V_{CORE} and/or external circuitry
- Voltage scaling in Run and Stop mode (6 configurable ranges)
- Backup regulator (~0.9 V)
- Voltage reference for analog peripheral/V_{REF+}
- 1.2 to 3.6 V V_{BAT} supply
- Low-power modes: Sleep, Stop, Standby and V_{BAT} supporting battery charging

Low-power consumption

- V_{BAT} battery operating mode with charging capability
- CPU and domain power state monitoring pins
- 2.95 µA in Standby mode (Backup SRAM OFF, RTC/LSE ON)

This is information on a product in full production. www.st.com

Clock management

- Internal oscillators: 64 MHz HSI, 48 MHz HSI48, 4 MHz CSI, 32 kHz LSI
- External oscillators: 4-48 MHz HSE, 32.768 kHz LSE
- 3× PLLs (1 for the system clock, 2 for kernel clocks) with Fractional mode

Interconnect matrix

- 3 bus matrices (1 AXI and 2 AHB)
- Bridges (5× AHB2-APB, 2× AXI2-AHB)

4 DMA controllers to unload the CPU

- 1× high-speed master direct memory access controller (MDMA) with linked list support
- 2× dual-port DMAs with FIFO
- 1× basic DMA with request router capabilities

Up to 35 communication peripherals

- 4× I2Cs FM+ interfaces (SMBus/PMBus)
- 5 USART/UART/LPUART (SPI, ISO 7816, LIN, IrDA, modem)
- 4 USART/UARTs in SPI mode, 6× SPIs: 3 with muxed duplex I2S audio class accuracy via internal audio PLL or external clock, 1x I2S in LP domain (up to 150 MHz)
- 4x SAIs (serial audio interface)
- SPDIFRX interface
- SWPMI single-wire protocol master I/F
- MDIO Slave interface
- 2× SD/SDIO/MMC interfaces (up to 125 MHz)
- 2× CAN controllers: 2 with CAN FD, 1 with time-triggered CAN (TT-CAN)
- 2× USB OTG interfaces (1FS, 1HS/FS) crystal-less solution with LPM and BCD
- Ethernet MAC interface with DMA controller
- HDMI-CEC
- 8- to 14-bit camera interface (up to 80 MHz)

11 analog peripherals

- 3× ADCs with 16-bit max. resolution (up to 36 channels, up to 3.6 MSPS)
- 1× temperature sensor
- 2× 12-bit D/A converters (1 MHz)
- 2× ultra-low-power comparators
- 2× operational amplifiers (7.3 MHz bandwidth)
- 1× digital filters for sigma delta modulator (DFSDM) with 8 channels/4 filters

Graphics

- LCD-TFT controller up to XGA resolution
- MIPI DSI host including an MIPI D-PHY to interface with low-pin count large displays
- Chrom-ART graphical hardware Accelerator (DMA2D) to reduce CPU load
- Hardware JPEG Codec

Up to 22 timers and watchdogs

- 1× high-resolution timer (2.1 ns max resolution)
- 2× 32-bit timers with up to 4 IC/OC/PWM or pulse counter and quadrature (incremental) encoder input (up to 240 MHz)
- 2× 16-bit advanced motor control timers (up to 240 MHz)
- 10× 16-bit general-purpose timers (up to 240 MHz)
- 5× 16-bit low-power timers (up to 240 MHz)
- 4× watchdogs (independent and window)
- 2× SysTick timers
- RTC with sub-second accuracy and hardware calendar

Cryptographic acceleration

- AES 128, 192, 256, TDES
- HASH (MD5, SHA-1, SHA-2), HMAC
- True random number generators

Debug mode

- SWD & JTAG interfaces
- 4-Kbyte embedded trace buffer

96-bit unique ID

All packages are ECOPACK2 compliant

Table 1. Device summary

Reference	Part number
STM32H757xI	STM32H757AI, STM32H757BI, STM32H757II, STM32H757XI, STM32H757ZI

Contents

1 Introduction 13

2 Description 14

3 Functional overview 20

3.1 Dual Arm® Cortex® cores 20

3.1.1 Arm® Cortex®-M7 with FPU 20

3.1.2 Arm® Cortex®-M4 with FPU 21

3.2 Memory protection unit (MPU) 21

3.3 Memories 21

3.3.1 Embedded flash memory 21

3.3.2 Secure access mode 22

3.3.3 Embedded SRAM 23

3.3.4 ART accelerator 23

3.4 Boot modes 24

3.5 Power supply management 25

3.5.1 Power supply scheme 25

3.5.2 Power supply supervisor 26

3.5.3 Voltage regulator (SMPS step-down converter and LDO) 27

3.5.4 SMPS step-down converter 27

3.6 Low-power strategy 28

3.7 Reset and clock controller (RCC) 29

3.7.1 Clock management 29

3.7.2 System reset sources 30

3.8 General-purpose input/outputs (GPIOs) 30

3.9 Bus-interconnect matrix 30

3.10 DMA controllers 32

3.11 Chrom-ART Accelerator (DMA2D) 32

3.12 Nested vectored interrupt controller (NVIC) 33

3.13 Extended interrupt and event controller (EXTI) 33

3.14 Cyclic redundancy check calculation unit (CRC) 33

3.15 Flexible memory controller (FMC) 34

3.16 Quad-SPI memory interface (QUADSPI) 34

3.17 Analog-to-digital converters (ADCs) 34
3.18 Temperature sensor 35
3.19 V_{BAT} operation 35
3.20 Digital-to-analog converters (DAC) 36
3.21 Ultra-low-power comparators (COMP) 36
3.22 Operational amplifiers (OPAMP) 36
3.23 Digital filter for sigma-delta modulators (DFSDM) 37
3.24 Digital camera interface (DCMI) 38
3.25 LCD-TFT controller 39
3.26 DSI Host (DSI) 39
3.27 JPEG Codec (JPEG) 40
3.28 True random number generator (RNG) 41
3.29 Cryptographic acceleration (CRYP and HASH) 41
3.30 Timers and watchdogs 41
3.30.1 High-resolution timer (HRTIM1) 43
3.30.2 Advanced-control timers (TIM1, TIM8) 44
3.30.3 General-purpose timers (TIMx) 44
3.30.4 Basic timers TIM6 and TIM7 45
3.30.5 Low-power timers (LPTIM1, LPTIM2, LPTIM3, LPTIM4, LPTIM5) 45
3.30.6 Independent watchdogs 45
3.30.7 Window watchdogs 45
3.30.8 SysTick timer 45
3.31 Real-time clock (RTC), backup SRAM and backup registers 46
3.32 Inter-integrated circuit interface (I^2C) 47
3.33 Universal synchronous/asynchronous receiver transmitter (USART) . . . 47
3.34 Low-power universal asynchronous receiver transmitter (LPUART) 48
3.35 Serial peripheral interfaces (SPI)/integrated interchip sound interfaces (I2S) 49
3.36 Serial audio interfaces (SAI) 49
3.37 SPDIFRX Receiver Interface (SPDIFRX) 50
3.38 Single wire protocol master interface (SWPMI) 50
3.39 Management Data Input/Output (MDIO) slaves 51
3.40 SD/SDIO/MMC card host interfaces (SDMMC) 51
3.41 Controller area network (FDCAN1, FDCAN2) 51

3.42 Universal serial bus on-the-go high-speed (OTG_HS) 52
3.43 Ethernet MAC interface with dedicated DMA controller (ETH) 52
3.44 High-definition multimedia interface (HDMI) - consumer electronics control (CEC) 53
3.45 Debug infrastructure 53

4 Memory mapping 55

5 Pinout, pin description and alternate functions 56

6 Electrical characteristics 102

6.1 Parameter conditions 102
6.1.1 Minimum and maximum values 102
6.1.2 Typical values 102
6.1.3 Typical curves 102
6.1.4 Loading capacitor 102
6.1.5 Pin input voltage 102
6.1.6 Power supply scheme 103
6.1.7 Current consumption measurement 104
6.2 Absolute maximum ratings 104
6.3 Operating conditions 106
6.3.1 General operating conditions 106
6.3.2 VCAP external capacitor 109
6.3.3 SMPS step-down converter 109
6.3.4 Operating conditions at power-up / power-down 111
6.3.5 Embedded reset and power control block characteristics 112
6.3.6 Embedded reference voltage 113
6.3.7 Supply current characteristics 114
6.3.8 Wakeup time from low-power modes 135
6.3.9 External clock source characteristics 136
6.3.10 Internal clock source characteristics 140
6.3.11 PLL characteristics 143
6.3.12 MIPI D-PHY characteristics 144
6.3.13 MIPI D-PHY regulator characteristics 147
6.3.14 Memory characteristics 148
6.3.15 EMC characteristics 149
6.3.16 Absolute maximum ratings (electrical sensitivity) 151

6.3.17 I/O current injection characteristics . . . 152
6.3.18 I/O port characteristics . . . 153
6.3.19 NRST pin characteristics . . . 160
6.3.20 FMC characteristics . . . 160
6.3.21 Quad-SPI interface characteristics . . . 181
6.3.22 Delay block (DLYB) characteristics . . . 184
6.3.23 16-bit ADC characteristics . . . 184
6.3.24 DAC characteristics . . . 193
6.3.25 Voltage reference buffer characteristics . . . 197
6.3.26 Temperature sensor characteristics . . . 198
6.3.27 Temperature and V_{BAT} monitoring . . . 199
6.3.28 Voltage booster for analog switch . . . 199
6.3.29 Comparator characteristics . . . 200
6.3.30 Operational amplifier characteristics . . . 201
6.3.31 Digital filter for Sigma-Delta Modulators (DFSDM) characteristics . . . 203
6.3.32 Camera interface (DCMI) timing specifications . . . 206
6.3.33 LCD-TFT controller (LTDC) characteristics . . . 207
6.3.34 Timer characteristics . . . 209
6.3.35 Communication interfaces . . . 209

7 Package information . . . 229
7.1 Device marking . . . 229
7.2 WLCSP156 package information (A086) . . . 229
7.3 UFBGA169 package information (A0YV) . . . 232
7.4 LQFP176 package information (1T) . . . 235
7.5 LQFP208 package information (UH) . . . 238
7.6 TFBGA240+25 package information (A07U) . . . 242
7.7 Thermal characteristics . . . 245
7.7.1 Reference documents . . . 246

8 Ordering information . . . 247

9 Important security notice . . . 248

10 Revision history . . . 249

List of tables

Table 1. Device summary . . . 2
Table 2. STM32H757xI features and peripheral counts . . . 15
Table 3. System vs domain low-power mode . . . 29
Table 4. DFSDM implementation . . . 38
Table 5. Timer feature comparison . . . 42
Table 6. USART features . . . 48
Table 7. Legend/abbreviations used in the pinout table . . . 61
Table 8. STM32H757xI pin/ball definition . . . 62
Table 9. Port A alternate functions . . . 89
Table 10. Port B alternate functions . . . 90
Table 11. Port C alternate functions . . . 92
Table 12. Port D alternate functions . . . 93
Table 13. Port E alternate functions . . . 94
Table 14. Port F alternate functions . . . 95
Table 15. Port G alternate functions . . . 96
Table 16. Port H alternate functions . . . 98
Table 17. Port I alternate functions . . . 99
Table 18. Port J alternate functions . . . 100
Table 19. Port K alternate functions . . . 101
Table 20. Voltage characteristics . . . 104
Table 21. Current characteristics . . . 105
Table 22. Thermal characteristics . . . 106
Table 23. General operating conditions . . . 106
Table 24. Supply voltage and maximum frequency configuration . . . 108
Table 25. VCAP operating conditions . . . 109
Table 26. Characteristics of SMPS step-down converter external components . . . 110
Table 27. SMPS step-down converter characteristics for external usage . . . 110
Table 28. Operating conditions at power-up / power-down (regulator ON) . . . 111
Table 29. Reset and power control block characteristics . . . 112
Table 30. Embedded reference voltage . . . 113
Table 31. Internal reference voltage calibration values . . . 114
Table 32. Typical and maximum current consumption in Run mode, code with data processing running from ITCM for Cortex-M7 core, and flash memory for Cortex-M4 (ART accelerator ON), LDO regulator ON . . . 115
Table 33. Typical and maximum current consumption in Run mode, code with data processing running from ITCM for Arm Cortex-M7 and flash memory for Arm Cortex-M4, ART accelerator ON, SMPS regulator . . . 115
Table 34. Typical and maximum current consumption in Run mode, code with data processing running from flash memory, both cores running, cache ON, ART accelerator ON, LDO regulator ON . . . 116
Table 35. Typical and maximum current consumption in Run mode, code with data processing running from flash memory, both cores running, cache OFF, ART accelerator OFF, LDO regulator ON . . . 117
Table 36. Typical and maximum current consumption in Run mode, code with data processing running from ITCM, only Arm Cortex-M7 running, LDO regulator ON . . . 118
Table 37. Typical and maximum current consumption in Run mode, code with data processing running from ITCM, only Arm Cortex-M7 running, SMPS regulator . . . 119
Table 38. Typical and maximum current consumption in Run mode, code with data processing

running from flash memory, only Arm Cortex-M7 running, cache ON, LDO regulator ON . . . 120
Table 39. Typical and maximum current consumption in Run mode, code with data processing running from flash memory, only Arm Cortex-M7 running, cache OFF, LDO regulator ON . . . 120
Table 40. Typical and maximum current consumption batch acquisition mode, LDO regulator ON . . . 121
Table 41. Typical and maximum current consumption in Run mode, code with data processing running from flash memory, only Arm Cortex-M4 running, ART accelerator ON, LDO regulator ON . . . 121
Table 42. Typical and maximum current consumption in Run mode, code with data processing running from flash bank 2, only Arm Cortex-M4 running, ART accelerator ON, SMPS regulator . . . 122
Table 43. Typical and maximum current consumption in Stop, LDO regulator ON . . . 122
Table 44. Typical and maximum current consumption in Stop, SMPS regulator . . . 123
Table 45. Typical and maximum current consumption in Sleep mode, LDO regulator . . . 124
Table 46. Typical and maximum current consumption in Sleep mode, SMPS regulator . . . 124
Table 47. Typical and maximum current consumption in Standby . . . 125
Table 48. Typical and maximum current consumption in VBAT mode . . . 125
Table 49. Peripheral current consumption in Run mode . . . 130
Table 50. Low-power mode wakeup timings . . . 135
Table 51. High-speed external user clock characteristics . . . 136
Table 52. Low-speed external user clock characteristics . . . 137
Table 53. 4-48 MHz HSE oscillator characteristics . . . 138
Table 54. Low-speed external user clock characteristics . . . 139
Table 55. HSI48 oscillator characteristics . . . 140
Table 56. HSI oscillator characteristics . . . 141
Table 57. CSI oscillator characteristics . . . 141
Table 58. LSI oscillator characteristics . . . 142
Table 59. PLL characteristics (wide VCO frequency range) . . . 143
Table 60. PLL characteristics (medium VCO frequency range) . . . 144
Table 61. MIPI D-PHY characteristics . . . 144
Table 62. MIPI D-PHY AC characteristics LP mode and HS/LP transitions . . . 146
Table 63. DSI regulator characteristics . . . 147
Table 64. Flash memory characteristics . . . 148
Table 65. Flash memory programming . . . 148
Table 66. Flash memory endurance and data retention . . . 149
Table 67. EMS characteristics . . . 149
Table 68. EMI characteristics for fHSE = 8 MHz and fCPU = 400 MHz . . . 150
Table 69. ESD absolute maximum ratings . . . 151
Table 70. Electrical sensitivities . . . 151
Table 71. I/O current injection susceptibility . . . 152
Table 72. I/O static characteristics . . . 153
Table 73. Output voltage characteristics for all I/Os except PC13, PC14, PC15 and PI8 . . . 155
Table 74. Output voltage characteristics for PC13, PC14, PC15 and PI8 . . . 156
Table 75. Output timing characteristics (HSLV OFF) . . . 157
Table 76. Output timing characteristics (HSLV ON) . . . 159
Table 77. NRST pin characteristics . . . 160
Table 78. Asynchronous non-multiplexed SRAM/PSRAM/NOR read timings . . . 162
Table 79. Asynchronous non-multiplexed SRAM/PSRAM/NOR read-NWAIT timings . . . 162
Table 80. Asynchronous non-multiplexed SRAM/PSRAM/NOR write timings . . . 164

Table 81. Asynchronous non-multiplexed SRAM/PSRAM/NOR write-NWAIT timings . . . 164
Table 82. Asynchronous multiplexed PSRAM/NOR read timings . . . 166
Table 83. Asynchronous multiplexed PSRAM/NOR read-NWAIT timings . . . 166
Table 84. Asynchronous multiplexed PSRAM/NOR write timings . . . 167
Table 85. Asynchronous multiplexed PSRAM/NOR write-NWAIT timings . . . 167
Table 86. Synchronous multiplexed NOR/PSRAM read timings . . . 169
Table 87. Synchronous multiplexed PSRAM write timings . . . 171
Table 88. Synchronous non-multiplexed NOR/PSRAM read timings . . . 173
Table 89. Synchronous non-multiplexed PSRAM write timings . . . 175
Table 90. Switching characteristics for NAND flash read cycles . . . 177
Table 91. Switching characteristics for NAND flash write cycles . . . 177
Table 92. SDRAM read timings . . . 179
Table 93. LPSDR SDRAM read timings . . . 179
Table 94. SDRAM Write timings . . . 180
Table 95. LPSDR SDRAM Write timings . . . 181
Table 96. QUADSPI characteristics in SDR mode . . . 182
Table 97. QUADSPI characteristics in DDR mode . . . 183
Table 98. Delay Block characteristics . . . 184
Table 99. ADC characteristics . . . 184
Table 100. Minimum sampling time vs RAIN . . . 188
Table 101. ADC accuracy . . . 190
Table 102. DAC characteristics . . . 193
Table 103. DAC accuracy . . . 195
Table 104. VREFBUF characteristics . . . 197
Table 105. Temperature sensor characteristics . . . 198
Table 106. Temperature sensor calibration values . . . 198
Table 107. V_{BAT} monitoring characteristics . . . 199
Table 108. V_{BAT} charging characteristics . . . 199
Table 109. Temperature monitoring characteristics . . . 199
Table 110. Voltage booster for analog switch characteristics . . . 199
Table 111. COMP characteristics . . . 200
Table 112. Operational amplifier characteristics . . . 201
Table 113. DFSDM measured timing - 1.62-3.6 V . . . 204
Table 114. DCMI characteristics . . . 206
Table 115. LTDC characteristics . . . 207
Table 116. TIMx characteristics . . . 209
Table 117. Minimum i2c_ker_ck frequency in all I2C modes . . . 210
Table 118. I2C analog filter characteristics . . . 210
Table 119. USART (SPI mode) characteristics . . . 211
Table 120. SPI dynamic characteristics . . . 213
Table 121. I^2S dynamic characteristics . . . 216
Table 122. SAI characteristics . . . 217
Table 123. MDIO Slave timing parameters . . . 219
Table 124. Dynamics characteristics: SD / MMC characteristics, VDD = 2.7 to 3.6 V . . . 220
Table 125. Dynamics characteristics: eMMC characteristics VDD = 1.71V to 1.9V . . . 221
Table 126. USB OTG_FS electrical characteristics . . . 223
Table 127. Dynamics characteristics: USB ULPI . . . 223
Table 128. Dynamics characteristics: Ethernet MAC signals for SMI . . . 224
Table 129. Dynamics characteristics: Ethernet MAC signals for RMII . . . 225
Table 130. Dynamics characteristics: Ethernet MAC signals for MII . . . 226
Table 131. Dynamics JTAG characteristics . . . 227
Table 132. Dynamics SWD characteristics: . . . 227

Table 133. WLCSP156 - Mechanical data 230
Table 134. WLCSP156 - Example of PCB design rules 231
Table 135. UFBGA169 - Mechanical data 233
Table 136. UFBGA169 - Example of PCB design rules (0.5 mm pitch BGA) 235
Table 137. LQFP176 - Mechanical data 236
Table 138. LQFP208 - Mechanical data 240
Table 139. TFBGA240+25 - Mechanical data 243
Table 140. TFBGA240+25 - Tolerance of form and position 243
Table 141. Tolerance of form and position definitions 244
Table 142. TFBGA240+25 - Example of PCB design rules 245
Table 143. Thermal characteristics 246
Table 144. Document revision history 249

List of figures

Figure 1. STM32H757xI block diagram . . . 18
Figure 2. TFBGA240+25 ball assignment differences . . . 19
Figure 3. ART accelerator schematic and environment . . . 24
Figure 4. Power-up/power-down sequence . . . 26
Figure 5. STM32H757xI bus matrix . . . 31
Figure 6. WLCSP156 ballout . . . 56
Figure 7. UFBGA169 ballout . . . 57
Figure 8. LQFP176 pinout . . . 58
Figure 9. LQFP208 pinout . . . 59
Figure 10. TFBGA240+25 ballout . . . 60
Figure 11. Pin loading conditions . . . 102
Figure 12. Pin input voltage . . . 102
Figure 13. Power supply scheme . . . 103
Figure 14. Current consumption measurement scheme . . . 104
Figure 15. External capacitor C_{EXT} . . . 109
Figure 16. External components for SMPS step-down converter . . . 110
Figure 17. Typical SMPS efficiency (%) vs load current (A) in Run mode at TJ = 30 °C . . . 126
Figure 18. Typical SMPS efficiency (%) vs load current (A) in Run mode at TJ = TJmax . . . 126
Figure 19. Typical SMPS efficiency (%) vs load current (A) in low-power mode at TJ = 30 °C . . . 127
Figure 20. Typical SMPS efficiency (%) vs load current (A) in low-power mode at TJ = TJmax . . . 128
Figure 21. High-speed external clock source AC timing diagram . . . 136
Figure 22. Low-speed external clock source AC timing diagram . . . 137
Figure 23. Typical application with an 8 MHz crystal . . . 139
Figure 24. Typical application with a 32.768 kHz crystal . . . 140
Figure 25. MIPI D-PHY HS/LP clock lane transition timing diagram . . . 147
Figure 26. MIPI D-PHY HS/LP data lane transition timing diagram . . . 147
Figure 27. VIL/VIH for all I/Os except BOOT0 . . . 154
Figure 28. Recommended NRST pin protection . . . 160
Figure 29. Asynchronous non-multiplexed SRAM/PSRAM/NOR read waveforms . . . 161
Figure 30. Asynchronous non-multiplexed SRAM/PSRAM/NOR write waveforms . . . 163
Figure 31. Asynchronous multiplexed PSRAM/NOR read waveforms . . . 165
Figure 32. Synchronous multiplexed NOR/PSRAM read timings . . . 168
Figure 33. Synchronous multiplexed PSRAM write timings . . . 170
Figure 34. Synchronous non-multiplexed NOR/PSRAM read timings . . . 172
Figure 35. Synchronous non-multiplexed PSRAM write timings . . . 174
Figure 36. NAND controller waveforms for read access . . . 176
Figure 37. NAND controller waveforms for write access . . . 177
Figure 38. SDRAM read access waveforms (CL = 1) . . . 178
Figure 39. SDRAM write access waveforms . . . 180
Figure 40. QUADSPI timing diagram - SDR mode . . . 183
Figure 41. Quad-SPI timing diagram - DDR mode . . . 184
Figure 42. ADC accuracy characteristics . . . 191
Figure 43. Typical connection diagram when using the ADC with FT/TT pins featuring analog switch function . . . 191
Figure 44. Power supply and reference decoupling (V_{REF+} not connected to V_{DDA}) . . . 192
Figure 45. Power supply and reference decoupling (V_{REF+} connected to V_{DDA}) . . . 192
Figure 46. 12-bit buffered /non-buffered DAC . . . 196
Figure 47. Channel transceiver timing diagrams . . . 205

Figure 48. DCMI timing diagram . . . 206
Figure 49. LCD-TFT horizontal timing diagram . . . 208
Figure 50. LCD-TFT vertical timing diagram . . . 208
Figure 51. USART timing diagram in SPI master mode. . . . 211
Figure 52. USART timing diagram in SPI slave mode . . . 212
Figure 53. SPI timing diagram - slave mode and CPHA = 0 . . . 214
Figure 54. SPI timing diagram - slave mode and CPHA = 1 . . . 214
Figure 55. SPI timing diagram - master mode . . . 215
Figure 56. I^2S slave timing diagram (Philips protocol)(1) . . . 216
Figure 57. I^2S master timing diagram (Philips protocol)(1) . . . 217
Figure 58. SAI master timing waveforms . . . 219
Figure 59. SAI slave timing waveforms . . . 219
Figure 60. MDIO Slave timing diagram . . . 220
Figure 61. SDIO high-speed mode . . . 222
Figure 62. SD default mode . . . 222
Figure 63. DDR mode . . . 222
Figure 64. ULPI timing diagram . . . 224
Figure 65. Ethernet SMI timing diagram . . . 225
Figure 66. Ethernet RMII timing diagram . . . 225
Figure 67. Ethernet MII timing diagram . . . 226
Figure 68. JTAG timing diagram . . . 227
Figure 69. SWD timing diagram . . . 228
Figure 70. WLCSP156 - Outline . . . 230
Figure 71. WLCSP156 - footprint example . . . 231
Figure 72. WLCSP156 marking example (package top view) . . . 232
Figure 73. UFBGA169 - Outline . . . 233
Figure 74. UFBGA169 - Footprint example . . . 234
Figure 75. LQFP176 - Outline(15) . . . 236
Figure 76. LQFP176 - Footprint example . . . 238
Figure 77. LQFP208 - Outline(15) . . . 239
Figure 78. LQFP208 - footprint example . . . 241
Figure 79. TFBGA240+25 - Outline . . . 242
Figure 80. TFBGA240+25 - Footprint example . . . 245

1 Introduction

This document provides information on STM32H757xI microcontrollers, such as description, functional overview, pin assignment and definition, electrical characteristics, packaging, and ordering information.

This document should be read in conjunction with the STM32H757xI reference manual (RM0399), available from the STMicroelectronics website *www.st.com*.

For information on the device errata with respect to the datasheet and reference manual, refer to the STM32H757xI errata sheet (ES0445), available on the STMicroelectronics website *www.st.com*.

For information on the Arm®[a] Cortex®-M7 core and Arm® Cortex®-M4 core, please refer to the Cortex®-M7 Technical Reference Manual, available from the http://www.arm.com website.

a. Arm is a registered trademark of Arm Limited (or its subsidiaries) in the US and/or elsewhere.

2 Description

STM32H757xI devices are based on the high-performance Arm® Cortex®-M7 and Cortex®-M4 32-bit RISC cores. The Cortex®-M7 core operates at up to 480 MHz and the Cortex®-M4 core at up to 240 MHz. Both cores feature a floating point unit (FPU) which supports Arm® single- and double-precision (Cortex®-M7 core) operations and conversions (IEEE 754 compliant), including a full set of DSP instructions and a memory protection unit (MPU) to enhance application security.

STM32H757xI devices incorporate high-speed embedded memories with a dual-bank flash memory of 2 Mbytes, up to 1 Mbyte of RAM (including 192 Kbytes of TCM RAM, up to 864 Kbytes of user SRAM and 4 Kbytes of backup SRAM), as well as an extensive range of enhanced I/Os and peripherals connected to APB buses, AHB buses, 2x32-bit multi-AHB bus matrix and a multi layer AXI interconnect supporting internal and external memory access.

All the devices offer three ADCs, two DACs, two ultra-low power comparators, a low-power RTC, a high-resolution timer, 12 general-purpose 16-bit timers, two PWM timers for motor control, five low-power timers, a true random number generator (RNG), and a cryptographic acceleration cell. The devices support four digital filters for external sigma-delta modulators (DFSDM). They also feature standard and advanced communication interfaces.

- Standard peripherals
  - Four I^2Cs
  - Four USARTs, four UARTs and one LPUART
  - Six SPIs, three I2Ss in Half-duplex mode. To achieve audio class accuracy, the I2S peripherals can be clocked by a dedicated internal audio PLL or by an external clock to allow synchronization.
  - Four SAI serial audio interfaces
  - One SPDIFRX interface
  - One SWPMI (Single Wire Protocol Master Interface)
  - Management Data Input/Output (MDIO) slaves
  - Two SDMMC interfaces
  - A USB OTG full-speed and a USB OTG high-speed interface with full-speed capability (with the ULPI)
  - One FDCAN plus one TT-FDCAN interface
  - An Ethernet interface
  - Chrom-ART Accelerator
  - HDMI-CEC
- Advanced peripherals including
  - A flexible memory control (FMC) interface
  - A Quad-SPI flash memory interface
  - A camera interface for CMOS sensors
  - An LCD-TFT display controller
  - A JPEG hardware compressor/decompressor
  - A DSI Host interface.

Refer to *Table 2: STM32H757xI features and peripheral counts* for the list of peripherals available on each part number.

STM32H757xI devices operate in the –40 to +85 °C temperature range from a 1.62 to 3.6 V power supply. The supply voltage can drop down to 1.62 V by using an external power supervisor (see *Section 3.5.2: Power supply supervisor)* and connecting the PDR_ON pin to V_{SS}. Otherwise the supply voltage must stay above 1.71 V with the embedded power voltage detector enabled.

Dedicated supply inputs for USB (OTG_FS and OTG_HS) are available on all packages to allow a greater power supply choice.

A comprehensive set of power-saving modes allows the design of low-power applications.

STM32H757xI devices are offered in 5 packages ranging from 156 pins to 240 pins/balls. The set of included peripherals changes with the device chosen.

These features make STM32H757xI microcontrollers suitable for a wide range of applications:

- Motor drive and application control
- Medical equipment
- Industrial applications: PLC, inverters, circuit breakers
- Printers, and scanners
- Alarm systems, video intercom, and HVAC
- Home audio appliances
- Mobile applications, Internet of Things
- Wearable devices: smart watches.

Figure 1 shows the device block diagram.

Table 2. STM32H757xI features and peripheral counts

Peripherals		STM32H757 ZI	STM32H757 AI	STM32H75 7II	STM32H75 7BI	STM32H757 XI
Flash memory in Kbytes		2 x 1 Mbyte				
SRAM in Kbytes	SRAM mapped onto AXI bus	512				
	SRAM1 (D2 domain)	128				
	SRAM2 (D2 domain)	64				
	SRAM3 (D2 domain)	32				
	SRAM4 (D3 domain)	64				
TCM RAM in Kbytes	ITCM RAM (instruction)	64				
	DTCM RAM (data)	128				
Backup SRAM (Kbytes)		4				
FMC		Yes(1)				
General-purpose input/outputs		99	112	119	148	168
Quad-SPI		Yes				

Table 2. STM32H757xI features and peripheral counts (continued)

Peripherals		STM32H757 ZI	STM32H757 AI	STM32H757 II	STM32H757 BI	STM32H757 XI
Ethernet		Yes				
Timers	High-resolution	1				
	General-purpose	10				
	Advanced-control (PWM)	2				
	Basic	2				
	Low-power	5				
Wakeup pins Tamper pins		4 2			6 3	
Random number generator		Yes				
Cryptographic accelerator		Yes				
Communication interfaces	SPI / I2S	6/3(2)				
	I2C	4				
	USART/ UART/ LPUART	4/4/ 1				
	SAI	4				
	SPDIFRX	4 inputs				
	SWPMI	Yes				
	MDIO	Yes				
	SDMMC	2				
	FDCAN/TT-FDCAN	1/1				
	USB OTG_FS	Yes				
	USB OTG_HS	Yes				
Ethernet and camera interface		Yes				
LCD-TFT		Yes				
MIPI-DSI Host		Yes				
JPEG Codec		Yes				
Chrom-ART Accelerator (DMA2D)		Yes				
16-bit ADCs		3				
Number of Direct channels Number of Fast channels Number of Slow channels		2 7 14	2 9 17		2 9 21	4 9 23
12-bit DAC Number of channels		Yes 2				
Comparators		2				
Operational amplifiers		2				

Table 2. STM32H757xI features and peripheral counts (continued)

Peripherals	STM32H757 ZI	STM32H757 AI	STM32H757 7II	STM32H757 7BI	STM32H757 XI
DFSDM	Yes				
Maximum CPU frequency	480 MHz				
VOS supported	VOS0(3), VOS1, VOS2, VOS3, VOS4, VOS5				
Operating voltage	1.62 to 3.6 V(4)				
Operating temperatures	Ambient temperatures: –40 up to +85 °C(5)				
	Junction temperature: –40 to + 125 °C				
Package	WLCSP156	UFBGA169	LQFP176	LQFP208	TFBGA240+25

1. SDRAM is not available on LQFP144 package.
2. The SPI1, SPI2 and SPI3 interfaces give the flexibility to work in an exclusive way in either the SPI mode or the I2S audio mode.
3. VOS0 not available for STM32H757XIH6A.
4. V_{DD}/V_{DDA} can drop down to 1.62 V by using an external power supervisor (see *Section 3.5.2: Power supply supervisor)* and connecting PDR_ON pin to V_{SS}. Otherwise the supply voltage must stay above 1.71 V with the embedded power voltage detector enabled.
5. The product junction temperature must be kept within the –40 to +125 °C range.

Figure 1. STM32H757xI block diagram

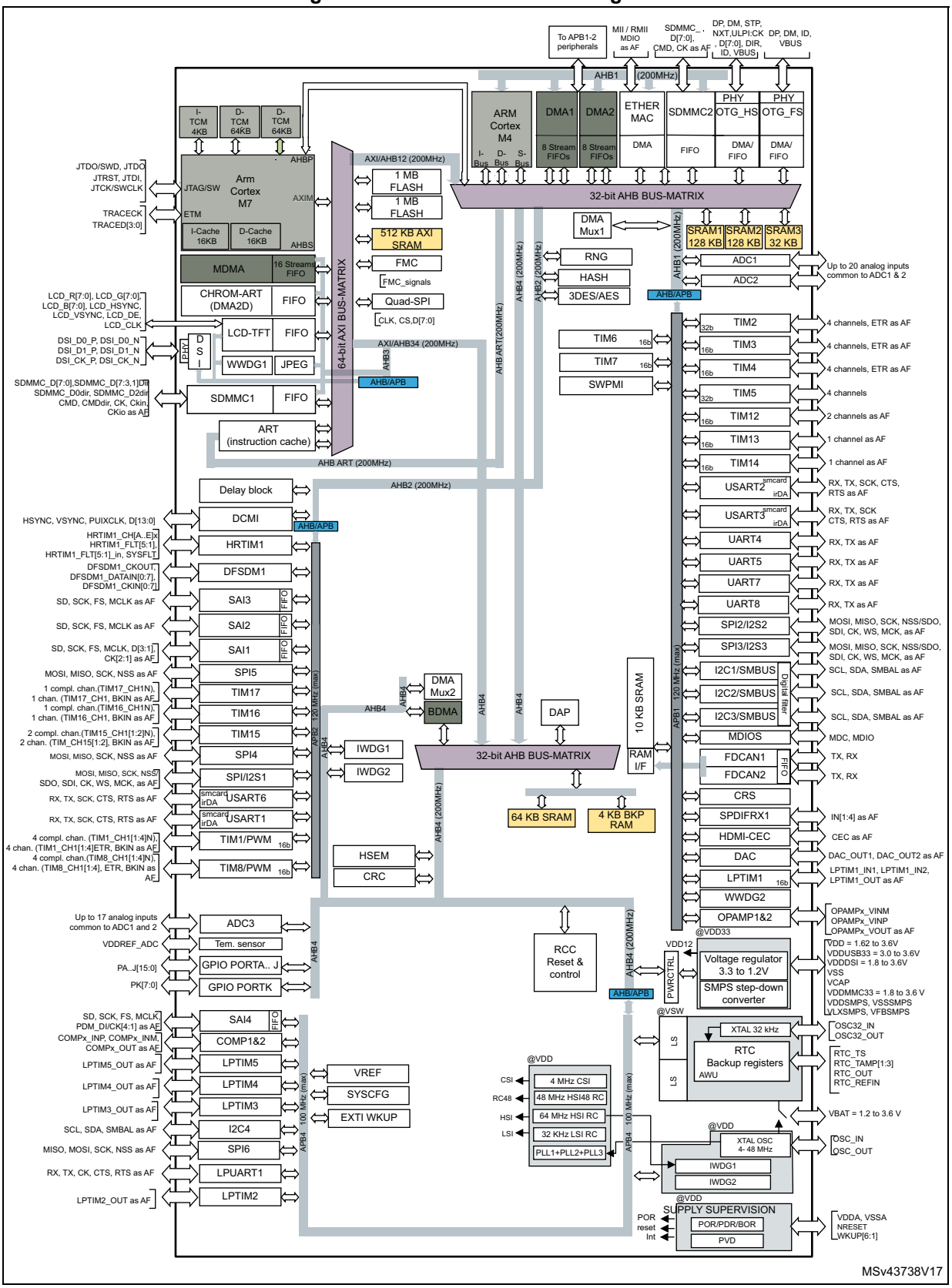

Compatibility throughout the family

STM32H757xI devices are not pin-to-pin compatible with STM32H7x3 devices (single core product line):

- The TFBGA240+25 ballout is compatible with STM32H7x3 devices, except for a few I/O balls as shown in *Figure 2*.
- LQFP208 and LQFP176 pinouts, as well as UFBGA176+25 ballout are not compatible with STM32H7x3 devices.

Figure 2. TFBGA240+25 ball assignment differences

	1	2	3	4	5	6	7	8	9	10	11	12	13	14	15	16	17
A	VSS	PI6	PI5	PI4	PB5	VDDLDO	VCAP	PK5	PG10	PG9	PD5	PD4	PC10	PA15	PI1	PI0	VSS
B	VBAT	VSS	PI7	PE1	PB6	VSS	PB4	PK4	PG11	PJ15	PD6	PD3	PC11	PA14	PI2	PH15	PH14
C	PC15-OSC32_OUT	PC14-OSC32_IN	PE2	PE0	PB7	PB3	PK6	PK3	PG12	VSS	PD7	PC12	VSS	PI3	PA13	VSS	VDDLDO
D	PE5	PE4	PE3	PB9	PB8	PG15	PK7	PG14	PG13	PJ14	PJ12	PD2	PD0	PA10	PA9	PH13	VCAP
E		PI9	PC13	PI8	PE6	VDD	PDR_ON	BOOT0	VDD	PJ13	VDD	PD1	PC8	PC9	PA8	PA12	PA11
F			PI10	PI11	VDD								PC7	PC6	PG8	PG7	VDD33USB
G	PF2		PF1	PF0	VDD		VSS	VSS	VSS	VSS	VSS		VDD	PG5	PG6	VSS	VDD5USB
H	PI12	PI13	PI14	PF3	VDD		VSS	VSS	VSS	VSS	VSS		VDD	PG4	PG3	PG2	PK2
J	PH1-OSC_OUT	PH0-OSC_IN	VSS	PF5	PF4		VSS	VSS	VSS	VSS	VSS		VDD	PK0	PK1	VSSDSI	VSSDSI
K	NRST	PF6	PF7	PF8	VDD		VSS	VSS	VSS	VSS	VSS		VDD	PJ11			
L	VDDA	PC0	PF10	PF9	VDD		VSS	VSS	VSS	VSS	VSS		VDD	PJ10			
M	VREF+	PC1	PC2	PC3	VDD								VDD	PJ9			
N	VREF-	PH2	PA2	PA1	PA0	PJ0	VDD	VDD	PE10	VDD	VDD	VDD	PJ8	PJ7	PJ6	VSS	
P	VSSA	PH3	PH4	PH5	PI15	PJ1	PF13	PF14	PE9	PE11	PB10	PB11	PH10	PH11	PD15	PD14	
R	PC2_C	PC3_C	PA6	VSS	PA7	PB2	PF12	VSS	PF15	PE12	PE15	PJ5	PH9	PH12	PD11	PD12	PD13
T	PA0_C	PA1_C	PA5	PC4	PB1	PJ2	PF11	PG0	PE8	PE13	PH6	VSS	PH8	PB12	PB15	PD10	PD9
U	VSS	PA3	PA4	PC5	PB0	PJ3	PJ4	PG1	PE7	PE14	VCAP	VDDLDO	PH7	PB13	PB14	PD8	VSS

STM32H7x7

VLX SMPS	PI9
VDD SMPS	VSS SMPS
PF2	VFB SMPS

VSSDSI	DSI_D1P	DSI_D1N
VSSDSI	DSI_CKP	DSI_CKN
VSSDSI	DSI_D0P	DSI_D0N
PJ6	VSS	VDDCAP DSI
PD15	PD14	VDDDSI

STM32H7x3

NC	PI9
NC	NC
PF2	NC

VSS	NC	NC
VSS	NC	NC
VSS	NC	NC
PJ6	VSS	NC
PD15	PD14	VDD

MSv48802V2

1. The balls highlighted in gray correspond to different signals on STM32H757xI and STM32H7x3 devices.

3 Functional overview

3.1 Dual Arm® Cortex® cores

The dual-core MIPI-DSI STM32H757xI devices embed two Arm® cores, a Cortex®-M7 and a Cortex®-M4. The Cortex®-M4 offers optimal performance for real-time applications while the Cortex®-M7 core can execute high-performance tasks in parallel.

The two cores belong to separate power domains. This allows designing gradual high-power efficiency solutions in combination with the low-power modes already available on all STM32 microcontrollers.

3.1.1 Arm® Cortex®-M7 with FPU

The Arm® Cortex®-M7 with double-precision FPU processor is the latest generation of Arm processors for embedded systems. It was developed to provide a low-cost platform that meets the needs of MCU implementation, with a reduced pin count and optimized power consumption, while delivering outstanding computational performance and low interrupt latency.

The Cortex®-M7 processor is a highly efficient high-performance featuring:

- Six-stage dual-issue pipeline
- Dynamic branch prediction
- Harvard architecture with L1 caches (16 Kbytes of I-cache and 16 Kbytes of D-cache)
- 64-bit AXI interface
- 64-bit ITCM interface
- 2x32-bit DTCM interfaces

The following memory interfaces are supported:

- Separate Instruction and Data buses (Harvard Architecture) to optimize CPU latency
- Tightly Coupled Memory (TCM) interface designed for fast and deterministic SRAM accesses
- AXI Bus interface to optimize Burst transfers
- Dedicated low-latency AHB-Lite peripheral bus (AHBP) to connect to peripherals.

The processor supports a set of DSP instructions which allow efficient signal processing and complex algorithm execution.

It also supports single and double precision FPU (floating point unit) speeds up software development by using metalanguage development tools, while avoiding saturation.

Figure 1 shows the general block diagram of the STM32H757xI family.

Note: Cortex®-M7 with FPU core is binary compatible with the Cortex®-M4 core.

3.1.2 Arm® Cortex®-M4 with FPU

The Arm® Cortex®-M4 processor is a high-performance embedded processor which supports DSP instructions. It was developed to provide an optimized power consumption MCU, while delivering outstanding computational performance and low interrupt latency.

The Arm® Cortex®-M4 processor is a highly efficient MCU featuring:

- 3-stage pipeline with branch prediction
- Harvard architecture
- 32-bit System (S-BUS) interface
- 32-bit I-BUS interface
- 32-bit D-BUS interface

The Arm® Cortex®-M4 processor also features a dedicated hardware adaptive real-time accelerator (ART Accelerator). This is an instruction cache memory composed of sixty-four 256-bit lines, a 256-bit cache buffer connected to the 64-bit AXI interface and a 32-bit interface for non-cacheable accesses.

3.2 Memory protection unit (MPU)

The devices feature two memory protection units. Each MPU manages the CPU access rights and the attributes of the system resources. It has to be programmed and enabled before use. Its main purposes are to prevent an untrusted user program to accidentally corrupt data used by the OS and/or by a privileged task, but also to protect data processes or read-protect memory regions.

The MPU defines access rules for privileged accesses and user program accesses. It allows defining up to 16 protected regions that can in turn be divided into up to 8 independent subregions, where region address, size, and attributes can be configured. The protection area ranges from 32 bytes to 4 Gbytes of addressable memory.

When an unauthorized access is performed, a memory management exception is generated.

3.3 Memories

3.3.1 Embedded flash memory

The STM32H757xI devices embed 2 Mbytes of flash memory that can be used for storing programs and data.

The flash memory is organized as 266-bit flash words memory that can be used for storing both code and data constants. Each word consists of:

- One flash word (8 words, 32 bytes or 256 bits)
- 10 ECC bits.

The flash memory is divided into two independent banks. Each bank is organized as follows:

- 1 Mbyte of user flash memory block containing eight user sectors of 128 Kbytes (4 K flash memory words)
- 128 Kbytes of System flash memory from which the device can boot
- 2 Kbytes (64 flash words) of user option bytes for user configuration

3.3.2 Secure access mode

In addition to other typical memory protection mechanism (RDP, PCROP), STM32H757xI devices introduce the Secure access mode, a new enhanced security feature. This mode allows developing user-defined secure services by ensuring, on the one hand code and data protection and on the other hand code safe execution.

Two types of secure services are available:

- STMicroelectronics Root Secure Services:

  These services are embedded in System memory. They provide a secure solution for firmware and third-party modules installation. These services rely on cryptographic algorithms based on a device unique private key.

- User-defined secure services:

  These services are embedded in user flash memory. Examples of user secure services are proprietary user firmware update solution, secure flash integrity check or any other sensitive applications that require a high level of protection.

  The secure firmware is embedded in specific user flash memory areas configured through option bytes.

Secure services are executed just after a reset and preempt all other applications to guarantee protected and safe execution. Once executed, the corresponding code and data are no more accessible.

The above secure services are available only for Cortex®-M7 core operating in Secure access mode. The other masters cannot access the option bytes involved in Secure access mode settings or the flash secured areas.

3.3.3 Embedded SRAM

All devices feature around 1 Mbyte of RAM with hardware ECC. The RAM is divided as follows:

- 512 Kbytes of AXI-SRAM mapped onto AXI bus on D1 domain.
- SRAM1 mapped on D2 domain: 128 Kbytes
- SRAM2 mapped on D2 domain: 128 Kbytes
- SRAM3 mapped on D2 domain: 32 Kbytes
- SRAM4 mapped on D3 domain: 64 Kbytes
- 4 Kbytes of backup SRAM

  The content of this area is protected against possible unwanted write accesses, and is retained in Standby or V_{BAT} mode.
- RAM mapped to TCM interface (ITCM and DTCM):

  Both ITCM and DTCM RAMs are 0 wait state memories. They can be accessed either from the Arm® Cortex®-M7 CPU or the MDMA (even in Sleep mode) through a specific AHB slave of the Cortex®-M7(AHBS):

  – 64 Kbytes of ITCM-RAM (instruction RAM)

    This RAM is connected to ITCM 64-bit interface designed for execution of critical real-times routines by the Cortex®-M7.

  – 128 Kbytes of DTCM-RAM (2x 64-Kbyte DTCM-RAMs on 2x32-bit DTCM ports)

    The DTCM-RAM could be used for critical real-time data, such as interrupt service routines or stack/heap memory. Both DTCM-RAMs can be used in parallel (for load/store operations) thanks to the Cortex®-M7 dual issue capability.

  The MDMA can be used to load code or data in ITCM or DTCM RAMs.

Error code correction (ECC)

Over the product lifetime, and/or due to external events such as radiations, invalid bits in memories may occur. They can be detected and corrected by ECC. This is an expected behavior that has to be managed at final-application software level in order to ensure data integrity through ECC algorithms implementation.

SRAM data are protected by ECC:

- 7 ECC bits are added per 32-bit word.
- 8 ECC bits are added per 64-bit word for AXI-SRAM and ITCM-RAM.

The ECC mechanism is based on the SECDED algorithm. It supports single-error correction and double-error detection.

3.3.4 ART accelerator

The ART (adaptive real-time) accelerator block speeds up instruction fetch accesses of the Cortex®-M4 core from D1-domain internal memories (flash memory bank 1, flash memory bank 2, AXI SRAM) and from D1-domain external memories attached via Quad-SPI controller and Flexible memory controller (FMC).

The ART accelerator is a 256-bit cache line using 64-bit WRAP4 accesses from the 64-bit AXI D1 domain. The acceleration is achieved by loading selected code into an embedded cache and making it instantly available to Cortex®-M4 core, thus avoiding latency due to memory wait states.

Figure 3. shows the block schematic and the environment of the ART accelerator.

Figure 3. ART accelerator schematic and environment

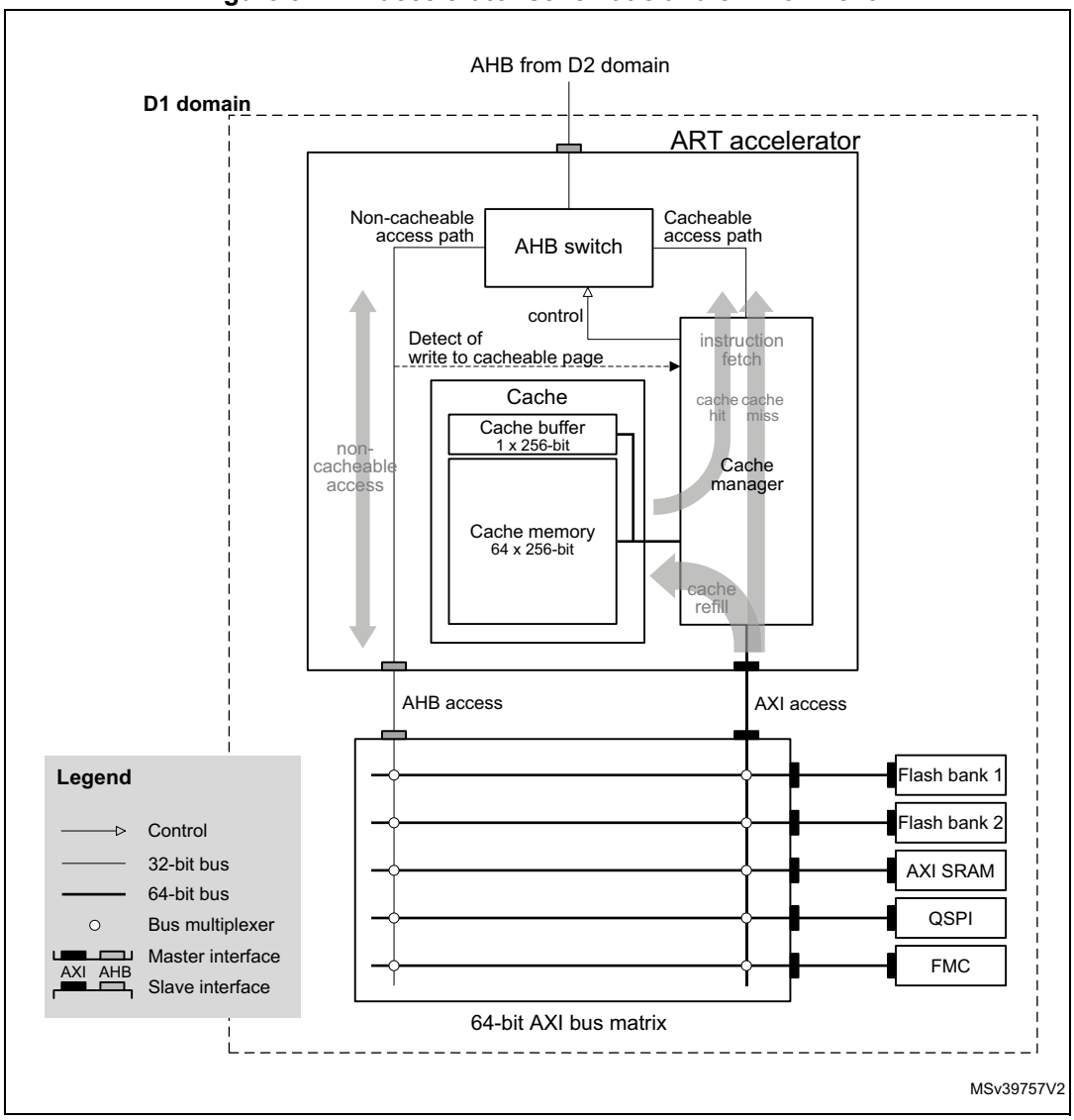

3.4 Boot modes

By default, the boot codes are executed simultaneously by both cores. However, by programming the appropriate flash user option byte, it is possible to boot from one core while clock-gating the other core.

At startup, the boot memory space is selected by the BOOT pin and BOOT_ADDx option bytes, allowing to program any boot memory address from 0x0000 0000 to 0x3FFF FFFF which includes:

- All flash address space
- Flash memory and SRAMs (except for ITCM /DTCM RAMs which cannot be accessed by the Cortex®-M4 core)

The bootloader is located in non-user System memory. It is used to reprogram the flash memory through one of the following interfaces: USART, I2C, SPI, USB-DFU, FDCAN. Refer to *STM32 microcontroller System memory Boot mode* application note (AN2606) for details.

3.5 Power supply management

3.5.1 Power supply scheme

STM32H757xI power supply voltages are the following:

- V_{DD} = 1.62 to 3.6 V: external power supply for I/Os, provided externally through V_{DD} pins.
- V_{DDLDO} = 1.62 to 3.6 V: supply voltage for the internal regulator supplying V_{CORE}
- V_{DDA} = 1.62 to 3.6 V: external analog power supplies for ADC, DAC, COMP and OPAMP.
- $V_{DD33USB}$ and $V_{DD50USB}$:

  $V_{DD50USB}$ can be supplied through the USB cable to generate the $V_{DD33USB}$ via the USB internal regulator. This allows supporting a V_{DD} supply different from 3.3 V.

  The USB regulator can be bypassed to supply directly $V_{DD33USB}$ with $V_{DD33USB}$ ≈ 3.3 V (see electrical characteristics).
- V_{BAT} = 1.2 to 3.6 V: power supply for the V_{SW} domain when V_{DD} is not present.
- V_{CAP}: V_{CORE} supply voltage, which values depend on voltage scaling (1.0 V, 1.1 V, 1.2 V or 1.35 V). They are configured through VOS bits in PWR_D3CR register and ODEN bit in the SYSCFG_PWRCR register. The V_{CORE} domain is split into the following power domains that can be independently switch off.
  - D1 domain containing some peripherals and the Cortex®-M7 core.
  - D2 domain containing a large part of the peripherals and the Cortex®-M4 core.
  - D3 domain containing some peripherals and the system control.
- V_{DDSMPS}= 1.62 V to 3.6 V: SMPS step-down converter power supply

  V_{DDSMPS} must be kept at the same voltage level as V_{DD}.
- V_{LXSMPS} = SMPS step-down converter output coupled to an inductor.
- V_{FBSMPS} = V_{CORE}, 1.8 V or 2.5 V external SMPS step-down converter feedback voltage sense input.
- V_{DDDSI} = 1.62 to 3.6 V: supply voltage for the DSI internal regulator
- $V_{DD12DSI}$ = 1.15 to 1.3 V: optional supply voltage for the DSI PHY (DSI regulator off)
- V_{CAPDSI}: DSI regulator supply output

During power-up and power-down phases, the following power sequence requirements must be respected (see *Figure 4*):

- When V_{DD} is below 1 V, other power supplies (V_{DDA}, $V_{DD33USB}$, $V_{DD50USB}$, V_{DDDSI}) must remain below V_{DD} + 300 mV.
- When V_{DD} is above 1 V, all power supplies are independent (except for V_{DDSMPS}, which must remain at the same level as V_{DD}).

During the power-down phase, V_{DD} can temporarily become lower than other supplies only if the energy provided to the microcontroller remains below 1 mJ. This allows external

decoupling capacitors to be discharged with different time constants during the power-down transient phase.

Figure 4. Power-up/power-down sequence

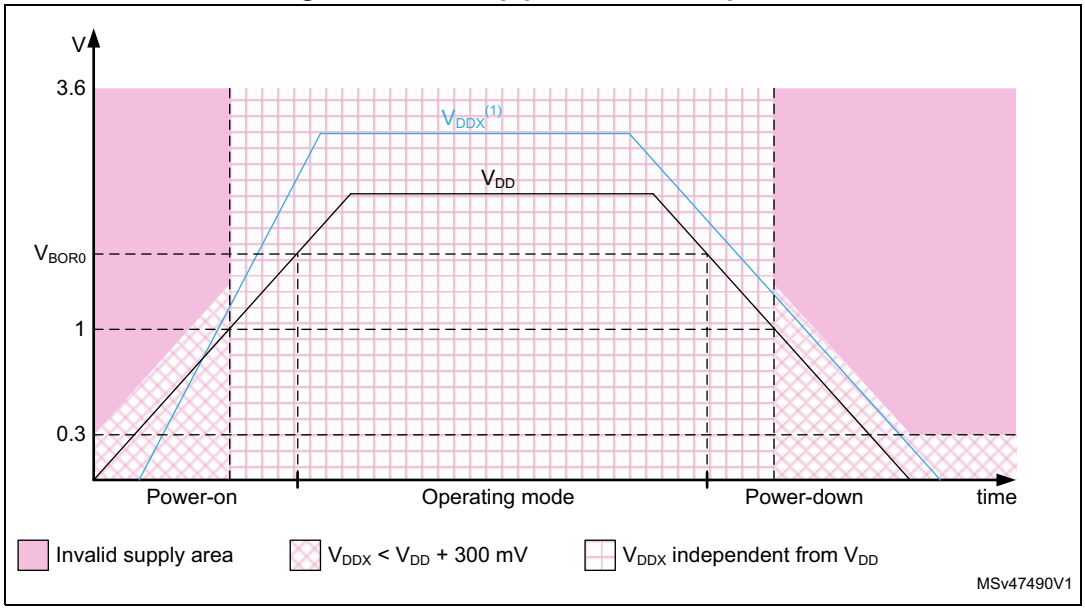

1. V_{DDx} refers to any power supply among V_{DDA}, $V_{DD33USB}$, $V_{DD50USB}$ and V_{DDDSI}.
2. V_{DD} and V_{DDSMPS} must be wired together into order to follow the same voltage sequence.

3.5.2 Power supply supervisor

The devices have an integrated power-on reset (POR)/ power-down reset (PDR) circuitry coupled with a Brownout reset (BOR) circuitry:

- Power-on reset (POR)

  The POR supervisor monitors V_{DD} power supply and compares it to a fixed threshold. The devices remain in Reset mode when V_{DD} is below this threshold,
- Power-down reset (PDR)

  The PDR supervisor monitors V_{DD} power supply. A reset is generated when V_{DD} drops below a fixed threshold.

  The PDR supervisor can be enabled/disabled through PDR_ON pin.
- Brownout reset (BOR)

  The BOR supervisor monitors V_{DD} power supply. Three BOR thresholds (from 2.1 to 2.7 V) can be configured through option bytes. A reset is generated when V_{DD} drops below this threshold.

3.5.3 Voltage regulator (SMPS step-down converter and LDO)

The same voltage regulator supplies the 3 power domains (D1, D2 and D3). D1 and D2 can be independently switched off.

Voltage regulator output can be adjusted according to application needs through 6 power supply levels:

- Run mode (VOS0 to VOS3)
  - Scale 0: boosted performance (available only with LDO regulator)[a]
  - Scale 1: high performance
  - Scale 2: medium performance and consumption
  - Scale 3: optimized performance and low-power consumption
- Stop mode (SVOS3 to SVOS5)
  - Scale 3: peripheral with wakeup from Stop mode capabilities (UART, SPI, I2C, LPTIM) are operational
  - Scale 4 and 5 where the peripheral with wakeup from Stop mode is disabled

    The peripheral functionality is disabled but wakeup from Stop mode is possible through GPIO or asynchronous interrupt.

3.5.4 SMPS step-down converter

The built-in SMPS step-down converter is a highly power-efficient DC/DC non-linear switching regulator that provides lower power consumption than a conventional voltage regulator (LDO).

a. LDO not available on STM32H757XIH6A.

The SMPS step-down converter can be used for the following purposes:

- Direct supply of the V_{CORE} domain
  - the SMPS step-down converter operating modes follow the device system operating modes (Run, Stop, Standby).
  - the SMPS step-down converter output voltage are set according to the selected VOS and SVOS bits (voltage scaling)
- Delivery of an intermediate voltage level to supply the internal voltage regulator (LDO)
  - SMPS step-down converter operating modes

    When the SDEXTHP bit is equal to 0 in the PWR_CR3 register, the SMPS step-down converter follows the device system operating modes (Run, Stop and Standby).

    When the SDEXTHP bit is equal to 1 in PWR_CR3, the SMPS step-down converter is forced to High-performance mode and does not follow the device system operating modes (Run, Stop and Standby).
  - The SMPS step-down converter output equals 1.8 V or 2.5 V according to the selected SD level
- Delivery of an external supply
  - The SMPS step-down converter is forced to High-performance mode (provided SDEXTHP bit is equal to 1 in PWR_CR3)
  - The SMPS step-down converter output equals 1.8 V or 2.5 V according to the selected SD level

3.6 Low-power strategy

There are several ways to reduce power consumption on STM32H757xI:

- Select the SMPS step-down converter as V_{CORE} supply voltage source, as it allows to enhance power efficiency.
- Select the adequate voltage scaling
- Decrease the dynamic power consumption by slowing down the system clocks even in Run mode, and by individually clock gating the peripherals that are not used.
- Save power consumption when one or both CPUs are idle, by selecting among the available low-power mode according to the user application needs. This allows achieving the best compromise between short startup time, low-power consumption, as well as available wakeup sources.

The devices feature several low-power modes:

- CSleep (CPU clock stopped)
- CStop (CPU sub-system clock stopped)
- DStop (Domain bus matrix clock stopped)
- Stop (System clock stopped)
- DStandby (Domain powered down)
- Standby (System powered down)

CSleep and CStop low-power modes are entered by the MCU when executing the WFI (Wait for Interrupt) or WFE (Wait for Event) instructions, or when the SLEEPONEXIT bit of the Cortex®-Mx core is set after returning from an interrupt service routine.

A domain can enter low-power mode (DStop or DStandby) when the processor, its subsystem and the peripherals allocated in the domain enter low-power mode. For instance D1 or D2 domain enters DStop/DStandby mode when the CPU of the domain is in CStop mode AND the other CPU has no peripheral allocated in that domain, or if it is in CStop mode too. D3 domain can enter DStop/DStandby mode if both core subsystems do not have active peripherals in D3 domain, and D3 is not forced in Run mode.

If part of the domain is not in low-power mode, the domain remains in the current mode.

Finally the system can enter Stop or Standby when all EXTI wakeup sources are cleared and the power domains are in DStop or DStandby mode.

The clock system can be re-initialize by a master CPU (either the Cortex®-M4 or -M7) after exiting Stop mode while the slave CPU is held in low-power mode. Once the master CPU has re-initialized the system, the slave CPU can receive a wakeup interrupt and proceed with the interrupt service routine.

Table 3. System vs domain low-power mode

System power mode	D1 domain power mode	D2 domain power mode	D3 domain power mode
Run	DRun/DStop/DStandby	DRun/DStop/DStandby	DRun
Stop	DStop/DStandby	DStop/DStandby	DStop
Standby	DStandby	DStandby	DStandby

3.7 Reset and clock controller (RCC)

The clock and reset controller is located in D3 domain. The RCC manages the generation of all the clocks, as well as the clock gating and the control of the system and peripheral resets. It provides a high flexibility in the choice of clock sources and allows to apply clock ratios to improve the power consumption. In addition, on some communication peripherals that are capable to work with two different clock domains (either a bus interface clock or a kernel peripheral clock), the system frequency can be changed without modifying the baudrate.

3.7.1 Clock management

The devices embed four internal oscillators, two oscillators with external crystal or resonator, two internal oscillators with fast startup time and three PLLs.

The RCC receives the following clock source inputs:

- Internal oscillators:
  - 64 MHz HSI clock
  - 48 MHz RC oscillator
  - 4 MHz CSI clock
  - 32 kHz LSI clock
- External oscillators:
  - HSE clock: 4-50 MHz (generated from an external source) or 4-48 MHz(generated from a crystal/ceramic resonator)
  - LSE clock: 32.768 kHz

The RCC provides three PLLs: one for system clock, two for kernel clocks.

The system starts on the HSI clock. The user application can then select the clock configuration.

3.7.2 System reset sources

Power-on reset initializes all registers while system reset reinitializes the system except for the debug, part of the RCC and power controller status registers, as well as the backup power domain.

A system reset is generated in the following cases:

- Power-on reset (pwr_por_rst)
- Brownout reset
- Low level on NRST pin (external reset)
- Independent watchdog 1 (from D1 domain)
- Independent watchdog 2 (from D2 domain)
- Window watchdog 1 (from D1 domain)
- Window watchdog 2 (from D2 domain)
- Software reset
- Low-power mode security reset
- Exit from Standby

3.8 General-purpose input/outputs (GPIOs)

Each of the GPIO pins can be configured by software as output (push-pull or open-drain, with or without pull-up or pull-down), as input (floating, with or without pull-up or pull-down) or as peripheral alternate function. Most of the GPIO pins are shared with digital or analog alternate functions. All GPIOs are high-current-capable and have speed selection to better manage internal noise, power consumption and electromagnetic emission.

After reset, all GPIOs (except debug pins) are in Analog mode to reduce power consumption (refer to GPIOs register reset values in the device reference manual).

The I/O configuration can be locked if needed by following a specific sequence in order to avoid spurious writing to the I/Os registers.

3.9 Bus-interconnect matrix

The devices feature an AXI bus matrix, two AHB bus matrices and bus bridges that allow interconnecting bus masters with bus slaves (see *Figure 5*).

Figure 5. STM32H757xI bus matrix

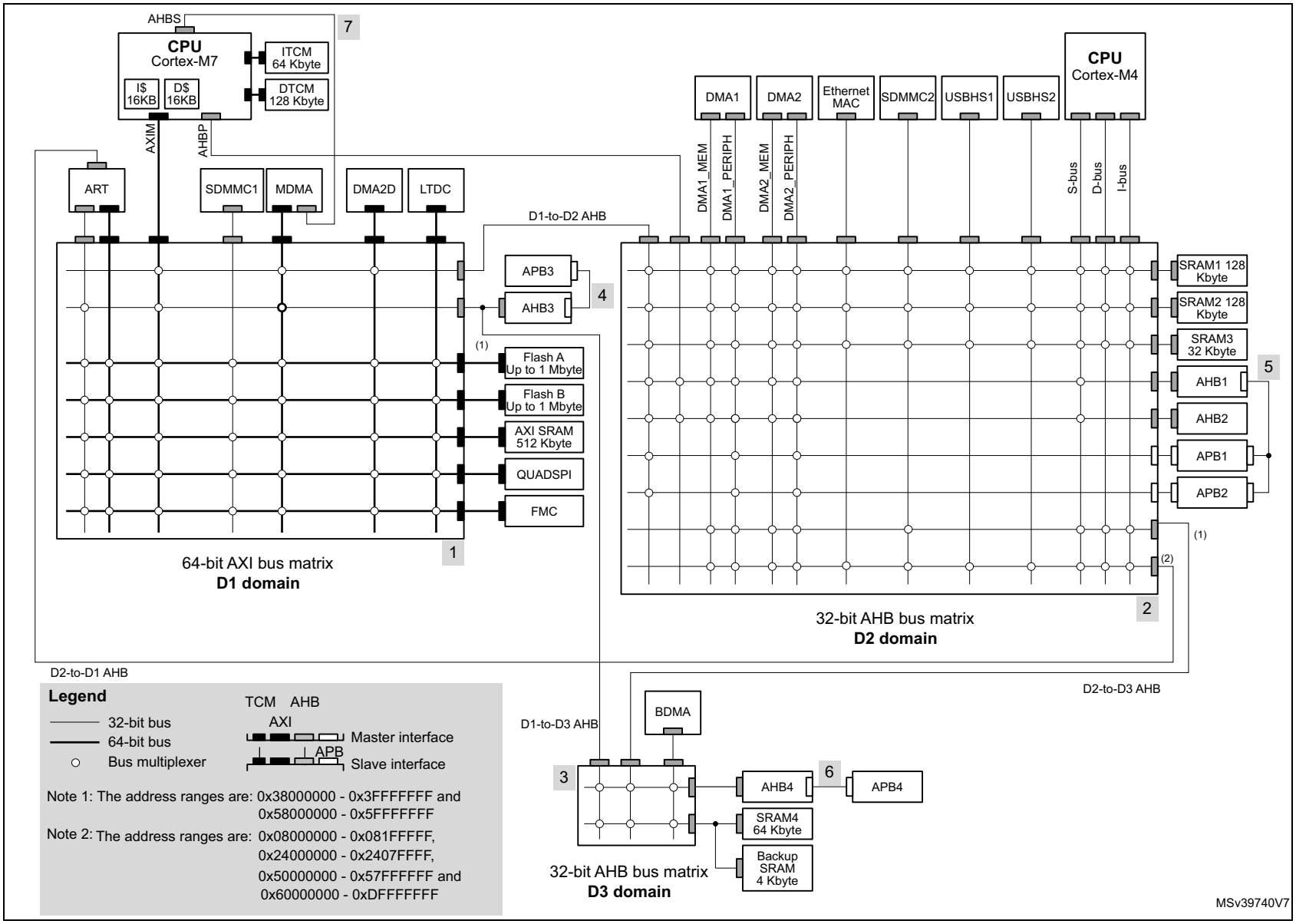

3.10 DMA controllers

The devices feature four DMA instances to unload CPU activity:

- A master direct memory access (MDMA)

  The MDMA is a high-speed DMA controller, which is in charge of all types of memory transfers (peripheral to memory, memory to memory, memory to peripheral), without any CPU action. It features a master AXI interface and a dedicated AHB interface to access Cortex®-M7 TCM memories.

  The MDMA is located in D1 domain. It is able to interface with the other DMA controllers located in D2 domain to extend the standard DMA capabilities, or can manage peripheral DMA requests directly.

  Each of the 16 channels can perform single block transfers, repeated block transfers and linked list transfers.
- Two dual-port DMAs (DMA1, DMA2) located in D2 domain, with FIFO and request router capabilities.
- One basic DMA (BDMA) located in D3 domain, with request router capabilities.

The DMA request router could be considered as an extension of the DMA controller. It routes the DMA peripheral requests to the DMA controller itself. This allowing managing the DMA requests with a high flexibility, maximizing the number of DMA requests that run concurrently, as well as generating DMA requests from peripheral output trigger or DMA event.

3.11 Chrom-ART Accelerator (DMA2D)

The Chrom-Art Accelerator (DMA2D) is a graphical accelerator which offers advanced bit blitting, row data copy and pixel format conversion. It supports the following functions:

- Rectangle filling with a fixed color
- Rectangle copy
- Rectangle copy with pixel format conversion
- Rectangle composition with blending and pixel format conversion

Various image format coding are supported, from indirect 4bpp color mode up to 32bpp direct color. It embeds dedicated memory to store color lookup tables. The DMA2D also supports block based YCbCr to handle JPEG decoder output.

An interrupt can be generated when an operation is complete or at a programmed watermark.

All the operations are fully automatized and are running independently from the CPU or the DMAs.

3.12 Nested vectored interrupt controller (NVIC)

Both Cortex®-M7 (CPU1) and Cortex®-M4 (CPU2) cores have their own nested vector interrupt controller (respectively NVIC1 and NVIC2). Each NVIC instance is able to manage 16 priority levels, and handle up to 150 maskable interrupt channels plus the 16 interrupt lines of the Cortex®-M7 with FPU core.

- Closely coupled NVIC gives low-latency interrupt processing
- Interrupt entry vector table address passed directly to the core
- Allows early processing of interrupts
- Processing of late arriving, higher-priority interrupts
- Support tail chaining
- Processor context automatically saved on interrupt entry, and restored on interrupt exit with no instruction overhead

This hardware block provides flexible interrupt management features with minimum interrupt latency.

3.13 Extended interrupt and event controller (EXTI)

The EXTI controller performs interrupt and event management. In addition, it can wake up the processors, power domains and/or D3 domain from Stop mode.

The EXTI handles up to 89 independent event/interrupt lines split as 28 configurable events and 61 direct events (including two interrupt lines for inter-core management).

Configurable events have dedicated pending flags, active edge selection, and software trigger capable.

Direct events provide interrupts or events from peripherals having a status flag.

3.14 Cyclic redundancy check calculation unit (CRC)

The CRC (cyclic redundancy check) calculation unit is used to get a CRC code using a programmable polynomial.

Among other applications, CRC-based techniques are used to verify data transmission or storage integrity. In the scope of the EN/IEC 60335-1 standard, they offer a means of verifying the flash memory integrity. The CRC calculation unit helps compute a signature of the software during runtime, to be compared with a reference signature generated at link-time and stored at a given memory location.

3.15 Flexible memory controller (FMC)

The FMC controller main features are the following:

- Interface with static-memory mapped devices including:
  - Static random access memory (SRAM)
  - NOR flash memory/OneNAND flash memory
  - PSRAM (4 memory banks)
  - NAND flash memory with ECC hardware to check up to 8 Kbytes of data
- Interface with synchronous DRAM (SDRAM/Mobile LPSDR SDRAM) memories
- 8-,16-,32-bit data bus width
- Independent Chip Select control for each memory bank
- Independent configuration for each memory bank
- Write FIFO
- Read FIFO for SDRAM controller
- The maximum FMC_CLK/FMC_SDCLK frequency for synchronous accesses is the FMC kernel clock divided by 2.

3.16 Quad-SPI memory interface (QUADSPI)

All devices embed a Quad-SPI memory interface, which is a specialized communication interface targeting Single, Dual or Quad-SPI flash memories. It supports both single and double datarate operations.

It can operate in any of the following modes:

- Direct mode through registers
- External flash status register polling mode
- Memory mapped mode.

Up to 256 Mbytes of external flash memory can be mapped, and 8-, 16- and 32-bit data accesses are supported as well as code execution.

The opcode and the frame format are fully programmable.

3.17 Analog-to-digital converters (ADCs)

The STM32H757xI devices embed three analog-to-digital converters, which resolution can be configured to 16, 14, 12, 10 or 8 bits.

Each ADC shares up to 20 external channels, performing conversions in the Single-shot or Scan mode. In Scan mode, automatic conversion is performed on a selected group of analog inputs.

Additional logic functions embedded in the ADC interface allow:

- Simultaneous sample and hold
- Interleaved sample and hold

The ADC can be served by the DMA controller, thus allowing to automatically transfer ADC converted values to a destination location without any software action.

In addition, an analog watchdog feature can accurately monitor the converted voltage of one, some or all selected channels. An interrupt is generated when the converted voltage is outside the programmed thresholds.

To synchronize A/D conversion and timers, the ADCs could be triggered by any of TIM1, TIM2, TIM3, TIM4, TIM6, TIM8, TIM15, HRTIM1 and LPTIM1 timer.

3.18 Temperature sensor

STM32H757xI devices embed a temperature sensor that generates a voltage (V_{TS}) that varies linearly with the temperature. This temperature sensor is internally connected to ADC3_IN18. The conversion range is between 1.7 V and 3.6 V. It can measure the device junction temperature ranging from − 40 up to +125 °C.

The temperature sensor have a good linearity, but it has to be calibrated to obtain a good overall accuracy of the temperature measurement. As the temperature sensor offset varies from chip to chip due to process variation, the uncalibrated internal temperature sensor is suitable for applications that detect temperature changes only. To improve the accuracy of the temperature sensor measurement, each device is individually factory-calibrated by ST. The temperature sensor factory calibration data are stored by ST in the System memory area, which is accessible in Read-only mode.

3.19 V_{BAT} operation

The V_{BAT} power domain contains the RTC, the backup registers and the backup SRAM.

To optimize battery duration, this power domain is supplied by V_{DD} when available or by the voltage applied on VBAT pin (when V_{DD} supply is not present). V_{BAT} power is switched when the PDR detects that V_{DD} dropped below the PDR level.

The voltage on the VBAT pin could be provided by an external battery, a supercapacitor or directly by V_{DD}, in which case, the V_{BAT} mode is not functional.

V_{BAT} operation is activated when V_{DD} is not present.

The V_{BAT} pin supplies the RTC, the backup registers and the backup SRAM.

Note: When the microcontroller is supplied from V_{BAT}, external interrupts and RTC alarm/events do not exit it from V_{BAT} operation.

When PDR_ON pin is connected to V_{SS} (Internal Reset OFF), the V_{BAT} functionality is no more available and V_{BAT} pin should be connected to V_{DD}.

3.20 Digital-to-analog converters (DAC)

The two 12-bit buffered DAC channels can be used to convert two digital signals into two analog voltage signal outputs.

This dual digital Interface supports the following features:

- two DAC converters: one for each output channel
- 8-bit or 12-bit monotonic output
- left or right data alignment in 12-bit mode
- synchronized update capability
- noise-wave generation
- triangular-wave generation
- dual DAC channel independent or simultaneous conversions
- DMA capability for each channel including DMA underrun error detection
- external triggers for conversion
- input voltage reference V_{REF+} or internal VREFBUF reference.

The DAC channels are triggered through the timer update outputs that are also connected to different DMA streams.

3.21 Ultra-low-power comparators (COMP)

STM32H757xI devices embed two rail-to-rail comparators (COMP1 and COMP2). They feature programmable reference voltage (internal or external), hysteresis and speed (low speed for low-power) as well as selectable output polarity.

The reference voltage can be one of the following:

- An external I/O
- A DAC output channel
- An internal reference voltage or submultiple (1/4, 1/2, 3/4).

All comparators can wake up from Stop mode, generate interrupts and breaks for the timers, and be combined into a window comparator.

3.22 Operational amplifiers (OPAMP)

STM32H757xI devices embed two rail-to-rail operational amplifiers (OPAMP1 and OPAMP2) with external or internal follower routing and PGA capability.

The operational amplifier main features are:

- PGA with a non-inverting gain ranging of 2, 4, 8 or 16 or inverting gain ranging of -1, -3, -7 or -15
- One positive input connected to DAC
- Output connected to internal ADC
- Low input bias current down to 1 nA
- Low input offset voltage down to 1.5 mV
- Gain bandwidth up to 7.3 MHz

The devices embeds two operational amplifiers (OPAMP1 and OPAMP2) with two inputs and one output each. These three I/Os can be connected to the external pins, thus enabling any type of external interconnections. The operational amplifiers can be configured internally as a follower, as an amplifier with a non-inverting gain ranging from 2 to 16 or with inverting gain ranging from -1 to -15.

3.23 Digital filter for sigma-delta modulators (DFSDM)

The devices embed one DFSDM with 4 digital filters modules and 8 external input serial channels (transceivers) or alternately 8 internal parallel inputs support.

The DFSDM peripheral is dedicated to interface the external ΣΔ modulators to microcontroller and then to perform digital filtering of the received data streams (which represent analog value on ΣΔ modulators inputs). DFSDM can also interface PDM (Pulse Density Modulation) microphones and perform PDM to PCM conversion and filtering in hardware. DFSDM features optional parallel data stream inputs from internal ADC peripherals or microcontroller memory (through DMA/CPU transfers into DFSDM).

DFSDM transceivers support several serial interface formats (to support various ΣΔ modulators). DFSDM digital filter modules perform digital processing according user selected filter parameters with up to 24-bit final ADC resolution.

The DFSDM peripheral supports:

- 8 multiplexed input digital serial channels:
  - configurable SPI interface to connect various SD modulator(s)
  - configurable Manchester coded 1 wire interface support
  - PDM (Pulse Density Modulation) microphone input support
  - maximum input clock frequency up to 20 MHz (10 MHz for Manchester coding)
  - clock output for SD modulator(s): 0..20 MHz
- alternative inputs from 8 internal digital parallel channels (up to 16 bit input resolution):
  - internal sources: ADC data or memory data streams (DMA)
- 4 digital filter modules with adjustable digital signal processing:
  - $Sinc^x$ filter: filter order/type (1..5), oversampling ratio (up to 1..1024)
  - integrator: oversampling ratio (1..256)
- up to 24-bit output data resolution, signed output data format
- automatic data offset correction (offset stored in register by user)
- continuous or single conversion
- start-of-conversion triggered by:
  - software trigger
  - internal timers
  - external events
  - start-of-conversion synchronously with first digital filter module (DFSDM0)
- analog watchdog feature:
  - low value and high value data threshold registers
  - dedicated configurable Sincx digital filter (order = 1..3, oversampling ratio = 1..32)
  - input from final output data or from selected input digital serial channels
  - continuous monitoring independently from standard conversion

- short circuit detector to detect saturated analog input values (bottom and top range):
  - up to 8-bit counter to detect 1..256 consecutive 0's or 1's on serial data stream
  - monitoring continuously each input serial channel
- break signal generation on analog watchdog event or on short circuit detector event
- extremes detector:
  - storage of minimum and maximum values of final conversion data
  - refreshed by software
- DMA capability to read the final conversion data
- interrupts: end of conversion, overrun, analog watchdog, short circuit, input serial channel clock absence
- "regular" or "injected" conversions:
  - "regular" conversions can be requested at any time or even in Continuous mode without having any impact on the timing of "injected" conversions
  - "injected" conversions for precise timing and with high conversion priority

Table 4. DFSDM implementation

DFSDM features	DFSDM1
Number of filters	4
Number of input transceivers/channels	8
Internal ADC parallel input	X
Number of external triggers	16
Regular channel information in identification register	X

3.24 Digital camera interface (DCMI)

The devices embed a camera interface that can connect with camera modules and CMOS sensors through an 8-bit to 14-bit parallel interface, to receive video data. The camera interface can achieve a data transfer rate up to 140 Mbyte/s using a 80 MHz pixel clock. It features:

- Programmable polarity for the input pixel clock and synchronization signals
- Parallel data communication can be 8-, 10-, 12- or 14-bit
- Supports 8-, 10-, 12- and 14-bit progressive video monochrome or raw bayer format, YCbCr 4:2:2 progressive video, RGB 565 progressive video or compressed data (like JPEG)
- Supports Continuous mode or Snapshot (a single frame) mode
- Capability to automatically crop the image

3.25 LCD-TFT controller

The LCD-TFT display controller provides a 24-bit parallel digital RGB (Red, Green, Blue) and delivers all signals to interface directly to a broad range of LCD and TFT panels up to XGA (1024x768) resolution with the following features:

- 2 display layers with dedicated FIFO (64x64-bit)
- Color Look-Up table (CLUT) up to 256 colors (256x24-bit) per layer
- Up to 8 input color formats selectable per layer
- Flexible blending between two layers using alpha value (per pixel or constant)
- Flexible programmable parameters for each layer
- Color keying (transparency color)
- Up to 4 programmable interrupt events
- AXI master interface with burst of 16 words

3.26 DSI Host (DSI)

The DSI Host is a dedicated peripheral for interfacing with MIPI® DSI compliant displays. It includes a dedicated video interface internally connected to the LTDC, a generic APB interface that can be used to transmit information to the display, and Video mode pattern generator:

- LTDC interface

  It is used to transmit information in Video mode, in which the transfers from the host processor to the peripheral take the form of a real-time pixel stream (DPI).

  This interface can also be used to transmit information in full bandwidth in the Adapted Command mode (DBI).
- APB slave interface

  The APB slave interface allows transmitting generic information in Command mode though a proprietary register interface. It can operate concurrently with the LTDC interface either in Video or Adapted Command mode.
- The Video mode pattern generator allows transmitting horizontal/vertical color bar and D-PHY BER testing pattern without any kind of stimuli.

The DSI Host main features are the following:

- Compliance with MIPI® Alliance standards
- Interface with MIPI® D-PHY
- Support for all commands defined in the MIPI® Alliance specification for DCS:
  - Transmission of all Command mode packets through the APB interface
  - Transmission of commands in low-power and high-speed during Video mode
- Support for up to two D-PHY data lanes
- Bidirectional communication and Escape mode support through data lane 0
- Support for non-continuous clock in D-PHY clock lane for additional power saving
- Support for Ultra Low-Power mode with PLL disabled
- ECC and Checksum capabilities
- Support for End of Transmission Packet (EoTp)
- Fault recovery schemes

- 3D transmission support
- Configurable selection of system interfaces
  - AMBA APB for control and optional support for Generic and DCS commands
  - Video mode interface through LTDC
  - Adapted Command mode interface through LTDC
  - Independently programmable Virtual Channel ID in Video, Adapted Command or APB Slave mode
- Video mode interfaces features
  - LTDC interface color coding mappings into 24-bit interface:

    16-bit RGB, configurations 1, 2, and 3

    18-bit RGB, configurations 1 and 2

    24-bit RGB
  - Programmable polarity of all LTDC interface signals
  - Extended resolutions beyond the DPI standard maximum resolution of 800x480 pixels; the maximum resolution is limited by the available DSI physical link bandwidth:

    Number of lanes: 2

    Maximum speed per lane: 1 Gbps
- Adapted interface features
  - Support for sending large amounts of data through the *memory_write_start* (WMS) and *memory_write_continue* (WMC) DCS commands
  - LTDC interface color coding mappings into 24-bit interface:

    16-bit RGB, configurations 1, 2, and 3

    18-bit RGB, configurations 1 and 2

    24-bit RGB
- Video mode pattern generator
  - Vertical and horizontal color bar generation without LTDC stimuli
  - BER pattern without LTDC stimuli

3.27 JPEG Codec (JPEG)

The JPEG Codec can encode and decode a JPEG stream as defined in the ***ISO/IEC 10918-1*** specification. It provides an fast and simple hardware compressor and decompressor of JPEG images with full management of JPEG headers.

The JPEG codec main features are as follows:

- 8-bit/channel pixel depths
- Single clock per pixel encoding and decoding
- Support for JPEG header generation and parsing
- Up to four programmable quantization tables
- Fully programmable Huffman tables (two AC and two DC)
- Fully programmable minimum coded unit (MCU)
- Encode/decode support (non simultaneous)
- Single clock Huffman coding and decoding
- Two-channel interface: Pixel/Compress In, Pixel/Compressed Out
- Support for single greyscale component
- Ability to enable/disable header processing
- Fully synchronous design
- Configuration for High-speed decode mode

3.28 True random number generator (RNG)

The RNG is a true random number generator that provides full entropy outputs to the application as 32-bit samples. It is composed of a live entropy source (analog) and an internal conditioning component.

3.29 Cryptographic acceleration (CRYP and HASH)

The devices embed a cryptographic processor that supports the advanced cryptographic algorithms usually required to ensure confidentiality, authentication, data integrity and non-repudiation when exchanging messages with a peer:

- Encryption/Decryption
  - DES/TDES (data encryption standard/triple data encryption standard): ECB (electronic codebook) and CBC (cipher block chaining) chaining algorithms, 64-, 128- or 192-bit key
  - AES (advanced encryption standard): ECB, CBC, GCM, CCM, and CTR (Counter mode) chaining algorithms, 128, 192 or 256-bit key
- Universal HASH
  - SHA-1 and SHA-2 (secure HASH algorithms)
  - MD5
  - HMAC

The cryptographic accelerator supports DMA request generation.

3.30 Timers and watchdogs

The devices include one high-resolution timer, two advanced-control timers, ten general-purpose timers, two basic timers, five low-power timers, two watchdogs and a SysTick timer.

All timer counters can be frozen in Debug mode.

Table 5 compares the features of the advanced-control, general-purpose and basic timers.

Table 5. Timer feature comparison

Timer type	Timer	Counter resolution	Counter type	Prescaler factor	DMA request generation	Capture/ compare channels	Comple-mentary output	Max interface clock (MHz)	Max timer clock (MHz) (1)
High-resolution timer	HRTIM1	16-bit	Up	/1 /2 /4 (x2 x4 x8 x16 x32, with DLL)	Yes	10	Yes	480	480
Advanced -control	TIM1, TIM8	16-bit	Up, Down, Up/down	Any integer between 1 and 65536	Yes	4	Yes	120	240
General purpose	TIM2, TIM5	32-bit	Up, Down, Up/down	Any integer between 1 and 65536	Yes	4	No	120	240
	TIM3, TIM4	16-bit	Up, Down, Up/down	Any integer between 1 and 65536	Yes	4	No	120	240
	TIM12	16-bit	Up	Any integer between 1 and 65536	No	2	No	120	240
	TIM13, TIM14	16-bit	Up	Any integer between 1 and 65536	No	1	No	120	240
	TIM15	16-bit	Up	Any integer between 1 and 65536	Yes	2	1	120	240
	TIM16, TIM17	16-bit	Up	Any integer between 1 and 65536	Yes	1	1	120	240

Table 5. Timer feature comparison (continued)

Timer type	Timer	Counter resolution	Counter type	Prescaler factor	DMA request generation	Capture/ compare channels	Comple-mentary output	Max interface clock (MHz)	Max timer clock (MHz) (1)
Basic	TIM6, TIM7	16-bit	Up	Any integer between 1 and 65536	Yes	0	No	120	240
Low-power timer	LPTIM1, LPTIM2, LPTIM3, LPTIM4, LPTIM5	16-bit	Up	1, 2, 4, 8, 16, 32, 64, 128	No	0	No	120	240

1. The maximum timer clock is up to 480 MHz depending on TIMPRE bit in the RCC_CFGR register and D2PRE1/2 bits in RCC_D2CFGR register.

3.30.1 High-resolution timer (HRTIM1)

The high-resolution timer (HRTIM1) allows generating digital signals with high-accuracy timings, such as PWM or phase-shifted pulses.

It consists of 6 timers, 1 master and 5 slaves, totaling 10 high-resolution outputs, which can be coupled by pairs for deadtime insertion. It also features 5 fault inputs for protection purposes and 10 inputs to handle external events such as current limitation, zero voltage or zero current switching.

The HRTIM1 timer is made of a digital kernel clocked at 480 MHz The high-resolution is available on the 10 outputs in all operating modes: variable duty cycle, variable frequency, and constant ON time.

The slave timers can be combined to control multiswitch complex converters or operate independently to manage multiple independent converters.

The waveforms are defined by a combination of user-defined timings and external events such as analog or digital feedbacks signals.

HRTIM1 timer includes options for blanking and filtering out spurious events or faults. It also offers specific modes and features to offload the CPU: DMA requests, Burst mode controller, Push-pull and Resonant mode.

It supports many topologies including LLC, Full bridge phase shifted, buck or boost converters, either in voltage or current mode, as well as lighting application (fluorescent or LED). It can also be used as a general purpose timer, for instance to achieve high-resolution PWM-emulated DAC.

3.30.2 Advanced-control timers (TIM1, TIM8)

The advanced-control timers (TIM1, TIM8) can be seen as three-phase PWM generators multiplexed on 6 channels. They have complementary PWM outputs with programmable inserted dead times. They can also be considered as complete general-purpose timers. Their 4 independent channels can be used for:

- Input capture
- Output compare
- PWM generation (Edge- or Center-aligned modes)
- One-pulse mode output

If configured as standard 16-bit timers, they have the same features as the general-purpose TIMx timers. If configured as 16-bit PWM generators, they have full modulation capability (0-100%).

The advanced-control timer can work together with the TIMx timers via the Timer Link feature for synchronization or event chaining.

TIM1 and TIM8 support independent DMA request generation.

3.30.3 General-purpose timers (TIMx)

There are ten synchronizable general-purpose timers embedded in the STM32H757xI devices (see *Table 5* for differences).

- **TIM2, TIM3, TIM4, TIM5**

  The devices include 4 full-featured general-purpose timers: TIM2, TIM3, TIM4 and TIM5. TIM2 and TIM5 are based on a 32-bit auto-reload up/downcounter and a 16-bit prescaler while TIM3 and TIM4 are based on a 16-bit auto-reload up/downcounter and a 16-bit prescaler. All timers feature 4 independent channels for input capture/output compare, PWM or One-pulse mode output. This gives up to 16 input capture/output compare/PWMs on the largest packages.

  TIM2, TIM3, TIM4 and TIM5 general-purpose timers can work together, or with the other general-purpose timers and the advanced-control timers TIM1 and TIM8 via the Timer Link feature for synchronization or event chaining.

  Any of these general-purpose timers can be used to generate PWM outputs.

  TIM2, TIM3, TIM4, TIM5 all have independent DMA request generation. They are capable of handling quadrature (incremental) encoder signals and the digital outputs from 1 to 4 hall-effect sensors.

- **TIM12, TIM13, TIM14, TIM15, TIM16, TIM17**

  These timers are based on a 16-bit auto-reload upcounter and a 16-bit prescaler. TIM13, TIM14, TIM16 and TIM17 feature one independent channel, whereas TIM12 and TIM15 have two independent channels for input capture/output compare, PWM or One-pulse mode output. They can be synchronized with the TIM2, TIM3, TIM4, TIM5 full-featured general-purpose timers or used as simple timebases.

3.30.4 Basic timers TIM6 and TIM7

These timers are mainly used for DAC trigger and waveform generation. They can also be used as a generic 16-bit time base.

TIM6 and TIM7 support independent DMA request generation.

3.30.5 Low-power timers (LPTIM1, LPTIM2, LPTIM3, LPTIM4, LPTIM5)

The low-power timers have an independent clock and is running also in Stop mode if it is clocked by LSE, LSI or an external clock. It is able to wakeup the devices from Stop mode.

This low-power timer supports the following features:

- 16-bit up counter with 16-bit autoreload register
- 16-bit compare register
- Configurable output: pulse, PWM
- Continuous / One-shot mode
- Selectable software / hardware input trigger
- Selectable clock source:
- Internal clock source: LSE, LSI, HSI or APB clock
- External clock source over LPTIM input (working even with no internal clock source running, used by the Pulse Counter Application)
- Programmable digital glitch filter
- Encoder mode

3.30.6 Independent watchdogs

There are two independent watchdogs, one per domain. Each independent watchdog is based on a 12-bit downcounter and 8-bit prescaler. It is clocked from an independent 32 kHz internal RC and as it operates independently from the main clock, it can operate in Stop and Standby modes. It can be used either as a watchdog to reset the device when a problem occurs, or as a free-running timer for application timeout management. It is hardware- or software-configurable through the option bytes.

3.30.7 Window watchdogs

There are two window watchdogs, one per domain. Each window watchdog is based on a 7-bit downcounter that can be set as free-running. It can be used as a watchdog to reset the device or each respective domain (configurable in the RCC register), when a problem occurs. It is clocked from the main clock. It has an early warning interrupt capability and the counter can be frozen in Debug mode.

3.30.8 SysTick timer

The devices feature two SysTick timers, one per CPU. These timers are dedicated to real-time operating systems, but could also be used as a standard downcounter. It features:

- A 24-bit downcounter
- Autoreload capability
- Maskable system interrupt generation when the counter reaches 0
- Programmable clock source.

3.31 Real-time clock (RTC), backup SRAM and backup registers

The RTC is an independent BCD timer/counter. It supports the following features:

- Calendar with subsecond, seconds, minutes, hours (12 or 24 format), week day, date, month, year, in BCD (binary-coded decimal) format.
- Automatic correction for 28, 29 (leap year), 30, and 31 days of the month.
- Two programmable alarms.
- On-the-fly correction from 1 to 32767 RTC clock pulses. This can be used to synchronize it with a master clock.
- Reference clock detection: a more precise second source clock (50 or 60 Hz) can be used to enhance the calendar precision.
- Digital calibration circuit with 0.95 ppm resolution, to compensate for quartz crystal inaccuracy.
- Three anti-tamper detection pins with programmable filter.
- Timestamp feature which can be used to save the calendar content. This function can be triggered by an event on the timestamp pin, or by a tamper event, or by a switch to V_{BAT} mode.
- 17-bit auto-reload wakeup timer (WUT) for periodic events with programmable resolution and period.

The RTC and the 32 backup registers are supplied through a switch that takes power either from the V_{DD} supply when present or from the V_{BAT} pin.

The backup registers are 32-bit registers used to store 128 bytes of user application data when VDD power is not present. They are not reset by a system or power reset, or when the device wakes up from Standby mode.

The RTC clock sources can be:

- A 32.768 kHz external crystal (LSE)
- An external resonator or oscillator (LSE)
- The internal low-power RC oscillator (LSI, with typical frequency of 32 kHz)
- The high-speed external clock (HSE) divided by 32.

The RTC is functional in V_{BAT} mode and in all low-power modes when it is clocked by the LSE. When clocked by the LSI, the RTC is not functional in V_{BAT} mode, but is functional in all low-power modes.

All RTC events (Alarm, Wakeup Timer, Timestamp or Tamper) can generate an interrupt and wakeup the device from the low-power modes.

3.32 Inter-integrated circuit interface (I2C)

STM32H757xI devices embed four I^2C interfaces.

The I^2C bus interface handles communications between the microcontroller and the serial I^2C bus. It controls all I^2C bus-specific sequencing, protocol, arbitration and timing.

The I2C peripheral supports:

- I^2C-bus specification and user manual rev. 5 compatibility:
  - Target and controller modes, multicontroller capability
  - Standard-mode (Sm), with a bitrate up to 100 kbit/s
  - Fast-mode (Fm), with a bitrate up to 400 kbit/s
  - Fast-mode Plus (Fm+), with a bitrate up to 1 Mbit/s and 20 mA output drive I/Os
  - 7-bit and 10-bit addressing mode, multiple 7-bit target addresses
  - Programmable setup and hold times
  - Optional clock stretching
- System Management Bus (SMBus) specification rev 2.0 compatibility:
  - Hardware PEC (Packet Error Checking) generation and verification with ACK control
  - Address resolution protocol (ARP) support
  - SMBus alert
- Power System Management Protocol (PMBus™) specification rev 1.1 compatibility
- Independent clock: a choice of independent clock sources allowing the I2C communication speed to be independent from the PCLK reprogramming.
- Wakeup from Stop mode on address match
- Programmable analog and digital noise filters
- 1-byte buffer with DMA capability

3.33 Universal synchronous/asynchronous receiver transmitter (USART)

STM32H757xI devices have four embedded universal synchronous receiver transmitters (USART1, USART2, USART3 and USART6) and four universal asynchronous receiver transmitters (UART4, UART5, UART7 and UART8). Refer to *Table 6* for a summary of USARTx and UARTx features.

These interfaces provide asynchronous communication, IrDA SIR ENDEC support, multiprocessor communication mode, single-wire Half-duplex communication mode and have LIN Master/Slave capability. They provide hardware management of the CTS and RTS signals, and RS485 Driver Enable. They are able to communicate at speeds of up to 12.5 Mbit/s.

USART1, USART2, USART3 and USART6 also provide Smartcard mode (ISO 7816 compliant) and SPI-like communication capability.

The USARTs embed a Transmit FIFO (TXFIFO) and a Receive FIFO (RXFIFO). FIFO mode is enabled by software and is disabled by default.

All USART have a clock domain independent from the CPU clock, allowing the USARTx to wake up the MCU from Stop mode.The wakeup from Stop mode is programmable and can be done on:

- Start bit detection
- Any received data frame
- A specific programmed data frame
- Specific TXFIFO/RXFIFO status when FIFO mode is enabled.

All USART interfaces can be served by the DMA controller.

Table 6. USART features

USART modes/features(1)	USART1/2/3/6	UART4/5/7/8
Hardware flow control for modem	X	X
Continuous communication using DMA	X	X
Multiprocessor communication	X	X
Synchronous SPI mode (Master/Slave)	X	-
Smartcard mode	X	-
Single-wire Half-duplex communication	X	X
IrDA SIR ENDEC block	X	X
LIN mode	X	X
Dual clock domain and wakeup from low power mode	X	X
Receiver timeout interrupt	X	X
Modbus communication	X	X
Auto baud rate detection	X	X
Driver Enable	X	X
USART data length	7, 8 and 9 bits	
Tx/Rx FIFO	X	X
Tx/Rx FIFO size	16	

1. X = supported.

3.34 Low-power universal asynchronous receiver transmitter (LPUART)

The device embeds one Low-Power UART (LPUART1). The LPUART supports asynchronous serial communication with minimum power consumption. It supports half duplex single wire communication and modem operations (CTS/RTS). It allows multiprocessor communication.

The LPUARTs embed a Transmit FIFO (TXFIFO) and a Receive FIFO (RXFIFO). FIFO mode is enabled by software and is disabled by default.

The LPUART has a clock domain independent from the CPU clock, and can wakeup the system from Stop mode. The wakeup from Stop mode are programmable and can be done on:

- Start bit detection
- Any received data frame
- A specific programmed data frame
- Specific TXFIFO/RXFIFO status when FIFO mode is enabled.

Only a 32.768 kHz clock (LSE) is needed to allow LPUART communication up to 9600 baud. Therefore, even in Stop mode, the LPUART can wait for an incoming frame while having an extremely low energy consumption. Higher speed clock can be used to reach higher baudrates.

LPUART interface can be served by the DMA controller.

3.35 Serial peripheral interfaces (SPI)/integrated interchip sound interfaces (I2S)

The devices feature up to six SPIs (SPI2S1, SPI2S2, SPI2S3, SPI4, SPI5 and SPI6) that allow communicating up to 150 Mbits/s in Master and Slave modes, in Half-duplex, Full-duplex and Simplex modes. The 3-bit prescaler gives 8 master mode frequencies and the frame is configurable from 4 to 16 bits. All SPI interfaces support NSS pulse mode, TI mode, Hardware CRC calculation and 8x 8-bit embedded Rx and Tx FIFOs with DMA capability.

Three standard I^2S interfaces (multiplexed with SPI1, SPI2 and SPI3) are available. They can be operated in Master or Slave mode, in Simplex or Full-duplex communication mode, and can be configured to operate with a 16-/32-bit resolution as an input or output channel. Audio sampling frequencies from 8 kHz up to 192 kHz are supported. When either or both of the I^2S interfaces is/are configured in Master mode, the master clock can be output to the external DAC/CODEC at 256 times the sampling frequency. All I^2S interfaces support 16x 8-bit embedded Rx and Tx FIFOs with DMA capability.

3.36 Serial audio interfaces (SAI)

The devices embed 4 SAIs (SAI1, SAI2, SAI3 and SAI4) that allow designing many stereo or mono audio protocols such as I2S, LSB or MSB-justified, PCM/DSP, TDM or AC’97. An SPDIF output is available when the audio block is configured as a transmitter. To bring this level of flexibility and reconfigurability, the SAI contains two independent audio sub-blocks. Each block has it own clock generator and I/O line controller.
Audio sampling frequencies up to 192 kHz are supported.
In addition, up to 6 microphones can be supported thanks to an embedded PDM interface. The SAI can work in master or slave configuration. The audio sub-blocks can be either receiver or transmitter and can work synchronously or asynchronously (with respect to the other one). The SAI can be connected with other SAIs to work synchronously.

3.37 SPDIFRX Receiver Interface (SPDIFRX)

The SPDIFRX peripheral is designed to receive an S/PDIF flow compliant with IEC-60958 and IEC-61937. These standards support simple stereo streams up to high sample rate, and compressed multi-channel surround sound, such as those defined by Dolby or DTS (up to 5.1).

The main SPDIFRX features are the following:

- Up to 4 inputs available
- Automatic symbol rate detection
- Maximum symbol rate: 12.288 MHz
- Stereo stream from 32 to 192 kHz supported
- Supports Audio IEC-60958 and IEC-61937, consumer applications
- Parity bit management
- Communication using DMA for audio samples
- Communication using DMA for control and user channel information
- Interrupt capabilities

The SPDIFRX receiver provides all the necessary features to detect the symbol rate, and decode the incoming data stream. The user can select the wanted SPDIF input, and when a valid signal will be available, the SPDIFRX will re-sample the incoming signal, decode the Manchester stream, recognize frames, sub-frames and blocks elements. It delivers to the CPU decoded data, and associated status flags.

The SPDIFRX also offers a signal named spdif_frame_sync, which toggles at the S/PDIF sub-frame rate that will be used to compute the exact sample rate for clock drift algorithms.

3.38 Single wire protocol master interface (SWPMI)

The Single wire protocol master interface (SWPMI) is the master interface corresponding to the Contactless Frontend (CLF) defined in the ETSI TS 102 613 technical specification. The main features are:

- Full-duplex communication mode
- automatic SWP bus state management (active, suspend, resume)
- configurable bitrate up to 2 Mbit/s
- automatic SOF, EOF and CRC handling

SWPMI can be served by the DMA controller.

3.39 Management Data Input/Output (MDIO) slaves

The devices embed an MDIO slave interface it includes the following features:

- 32 MDIO Registers addresses, each of which is managed using separate input and output data registers:
  - 32 x 16-bit firmware read/write, MDIO read-only output data registers
  - 32 x 16-bit firmware read-only, MDIO write-only input data registers
- Configurable slave (port) address
- Independently maskable interrupts/events:
  - MDIO Register write
  - MDIO Register read
  - MDIO protocol error
- Able to operate in and wake up from Stop mode

3.40 SD/SDIO/MMC card host interfaces (SDMMC)

Two SDMMC host interfaces are available. They support *MultiMediaCard System Specification Version 4.51* in three different databus modes: 1 bit (default), 4 bits and 8 bits.

Both interfaces support the *SD memory card specifications version 4.1.* and the *SDIO card specification version 4.0.* in two different databus modes: 1 bit (default) and 4 bits.

Each SDMMC host interface supports only one SD/SDIO/MMC card at any one time and a stack of MMC Version 4.51 or previous.

The SDMMC host interface embeds a dedicated DMA controller allowing high-speed transfers between the interface and the SRAM.

3.41 Controller area network (FDCAN1, FDCAN2)

The controller area network (CAN) subsystem consists of two CAN modules, a shared message RAM memory and a clock calibration unit.

Both CAN modules (FDCAN1 and FDCAN2) are compliant with ISO 11898-1 (CAN protocol specification version 2.0 part A, B) and CAN FD protocol specification version 1.0.

FDCAN1 supports time triggered CAN (TT-FDCAN) specified in ISO 11898-4, including event synchronized time-triggered communication, global system time, and clock drift compensation. The FDCAN1 contains additional registers, specific to the time triggered feature. The CAN FD option can be used together with event-triggered and time-triggered CAN communication.

A 10-Kbyte message RAM memory implements filters, receive FIFOs, receive buffers, transmit event FIFOs, transmit buffers (and triggers for TT-FDCAN). This message RAM is shared between the two FDCAN1 and FDCAN2 modules.

The common clock calibration unit is optional. It can be used to generate a calibrated clock for both FDCAN1 and FDCAN2 from the HSI internal RC oscillator and the PLL, by evaluating CAN messages received by the FDCAN1.

3.42 Universal serial bus on-the-go high-speed (OTG_HS)

The devices embed two USB OTG high-speed (up to 480 Mbit/s) device/host/OTG peripheral. OTG-HS1 supports both full-speed and high-speed operations, while OTG-HS2 supports only full-speed operations. They both integrate the transceivers for full-speed operation (12 Mbit/s) and are able to operate from the internal HSI48 oscillator. OTG-HS1 features a UTMI low-pin interface (ULPI) for high-speed operation (480 Mbit/s). When using the USB OTG-HS1 in HS mode, an external PHY device connected to the ULPI is required.

The USB OTG HS peripherals are compliant with the USB 2.0 specification and with the OTG 2.0 specification. They have software-configurable endpoint setting and supports suspend/resume. The USB OTG controllers require a dedicated 48 MHz clock that is generated by a PLL connected to the HSE oscillator.

The main features are:

- Combined Rx and Tx FIFO size of 4 Kbytes with dynamic FIFO sizing
- Supports the session request protocol (SRP) and host negotiation protocol (HNP)
- 9 bidirectional endpoints (including EP0)
- 16 host channels with periodic OUT support
- Software configurable to OTG1.3 and OTG2.0 modes of operation
- USB 2.0 LPM (Link Power Management) support
- Battery Charging Specification Revision 1.2 support
- Internal FS OTG PHY support
- External HS or HS OTG operation supporting ULPI in SDR mode (OTG_HS1 only)

  The OTG PHY is connected to the microcontroller ULPI port through 12 signals. It can be clocked using the 60 MHz output.
- Internal USB DMA
- HNP/SNP/IP inside (no need for any external resistor)
- For OTG/Host modes, a power switch is needed in case bus-powered devices are connected

3.43 Ethernet MAC interface with dedicated DMA controller (ETH)

The devices provide an IEEE-802.3-2002-compliant media access controller (MAC) for ethernet LAN communications through an industry-standard medium-independent interface (MII) or a reduced medium-independent interface (RMII). The microcontroller requires an external physical interface device (PHY) to connect to the physical LAN bus (twisted-pair, fiber, etc.). The PHY is connected to the device MII port using 17 signals for MII or 9 signals for RMII, and can be clocked using the 25 MHz (MII) from the microcontroller.

The devices include the following features:

- Supports 10 and 100 Mbit/s rates
- Dedicated DMA controller allowing high-speed transfers between the dedicated SRAM and the descriptors
- Tagged MAC frame support (VLAN support)
- Half-duplex (CSMA/CD) and full-duplex operation
- MAC control sublayer (control frames) support
- 32-bit CRC generation and removal
- Several address filtering modes for physical and multicast address (multicast and group addresses)
- 32-bit status code for each transmitted or received frame
- Internal FIFOs to buffer transmit and receive frames. The transmit FIFO and the receive FIFO are both 2 Kbytes.
- Supports hardware PTP (precision time protocol) in accordance with IEEE 1588 2008 (PTP V2) with the time stamp comparator connected to the TIM2 input
- Triggers interrupt when system time becomes greater than target time

3.44 High-definition multimedia interface (HDMI) - consumer electronics control (CEC)

The devices embed a HDMI-CEC controller that provides hardware support for the Consumer Electronics Control (CEC) protocol (Supplement 1 to the HDMI standard).

This protocol provides high-level control functions between all audiovisual products in an environment. It is specified to operate at low speeds with minimum processing and memory overhead. It has a clock domain independent from the CPU clock, allowing the HDMI-CEC controller to wakeup the MCU from Stop mode on data reception.

3.45 Debug infrastructure

The devices offer a comprehensive set of debug and trace features on both cores to support software development and system integration.

- Breakpoint debugging
- Code execution tracing
- Software instrumentation
- JTAG debug port
- Serial-wire debug port
- Trigger input and output
- Serial-wire trace port
- Trace port
- Arm® CoreSight™ debug and trace components

The debug can be controlled via a JTAG/Serial-wire debug access port, using industry standard debugging tools. The debug infrastructure allows debugging one core at a time, or both cores in parallel.

The trace port performs data capture for logging and analysis.

A 4-Kbyte embedded trace FIFO (ETF) allows recording data and sending them to any com port. In Trace mode, the trace is transferred by DMA to system RAM or to a high-speed interface (such as SPI or USB). It can even be monitored by a software running on one of the cores. Unlike hardware FIFO mode, this mode is invasive since it uses system resources which are shared by the processors.

4 Memory mapping

Refer to the product line reference manual for details on the memory mapping as well as the boundary addresses for all peripherals.

5 Pinout, pin description and alternate functions

Figure 6. WLCSP156 ballout

	13	12	11	10	9	8	7	6	5	4	3	2	1
A	DNC(1)	VDDLDO	VCAP	PB8	VDD	PB4	PG15	VDD	PD4	PD0	PA15	VDDLDO	VSS
B	VBAT	PE4	VDD	PE0	VSS	PB5	PB3	VSS	PD3	PC12	VDD	VCAP	PA12
C	PC14-OSC32_IN	PC15-OSC32_OUT	PE5	VSS	PB9	PB7	PB6	PD6	PC11	VSS	PA13	PA10	PA11
D	VDD	VSS SMPS	VSS	PE3	PE2	PE1	BOOT0	PD7	PC10	PA9	PA8	PC9	PC8
E	VDD SMPS	VLX SMPS	VFB SMPS	PF0	PC13	PE6	PDR_ON	PD2	PA14	PC7	VDD50 USB	VDD	VDD33 USB
F	PF3	PF2	PF4	PF5	PF1	PF11	PD5	PD1	PC6	PG4	VSS	PG8	PG5
G	VDD	VSS	PC0	PC1	PA6	PF12	PE10	PE11	PD8	PG3	PG2	DSI_ D1P	DSI_ D1N
H	PH1-OSC_OUT	PH0-OSC_IN	NRST	PA5	PB1	PF13	PE7	PB10	PB13	PD14	VSSDSI	DSI_ CKP	DSI_ CKN
J	VSSA	VREF+	VDDA	PA3	PA7	PF15	PE8	PE12	PB12	PD11	PD15	DSI_ D0P	DSI_ D0N
K	PC2_C	PC3_C	PA2	PA4	PB0	PF14	PE9	PE13	PB11	PD9	PD13	VDD	VCAP DSI
L	PA0	PA1	VSS	PC5	VSS	PG0	VSS	PE15	VSS	VDDLDO	PD10	PD12	VSS
M	VSS	VDD	PC4	PB2	VDD	PG1	VDD	PE14	VCAP	VDD	PB14	PB15	VSS

MSv43741V5

1. The DNC ball must neither be connected to GND nor to V_{DD}.
2. The above figure shows the package top view.

Figure 7. UFBGA169 ballout

	1	2	3	4	5	6	7	8	9	10	11	12	13
A	VSS	PE2	VDDLDO	VCAP	PB5	PB3	VSS	PD7	VDD	PD3	PA14	VSS	PA10
B	VBAT	VDD	PDR_ ON	VSS	BOOT0	PB4	VDD	PD6	VSS	PA15	PA13	VDD	VDDLDO
C	PC14_ OSC32_ IN	PE6	PE3	PE1	PB7	PG15	PG9	PD5	PD1	PD0	PC10	VSS	VCAP
D	VSS	PC15_ OSC32_ OUT	PE4	PE0	PB8	PB9	PG10	PD4	PC12	PA8	PA9	PA11	PA12
E	VLX SMPS	VDD	PC13	PE5	PB6	PG14	PG11	PD2	PC11	PC7	PC9	VDD	VSS
F	VDD SMPS	VSS SMPS	VFB SMPS	PF0	PF1	PF2	PG13	PG7	PG8	PC8	PC6	VDD50_ USB	VDD33_ USB
G	PF4	PF3	PF5	PF6	PF7	PF8	PG12	PG3	PG5	PG4	PG6	VSSDSI	VSSDSI
H	VDD	VSS	PF9	PF10	NRST	PB1	PG2	PE13	PD14	PD15	VSS DSI	DSI_ D1P	DSI_ D1N
J	PH1_ OSCOUT	PH0_ OSCIN	PC1	PC0	PA5	PF12	PG1	PE12	PD13	PD12	VSS DSI	DSI_ CKP	DSI_ CKN
K	PC2_C	PC3_C	PA0	PA7	PC5	PF11	PE7	PE15	PB10	PD11	VSS DSI	DSI_ D0P	DSI_ D0N
L	VSSA_ VREF-	VDDA	PA1	PC4	PB2	PG0	PE10	PE8	VDD	PB12	VDD	VCAP DSI	VSS
M	VREF+	VDD	PA2	PA6	PF13	VSS	PF15	PE14	VSS	PB13	PB15	PD9	VDD DSI
N	VSS	PA3	PA4	PB0	PF14	PE9	PE11	PB11	VCAP	VDDLDO	PB14	PD8	PD10

MSv43740V4

1. The above figure shows the package top view.

Figure 8. LQFP176 pinout

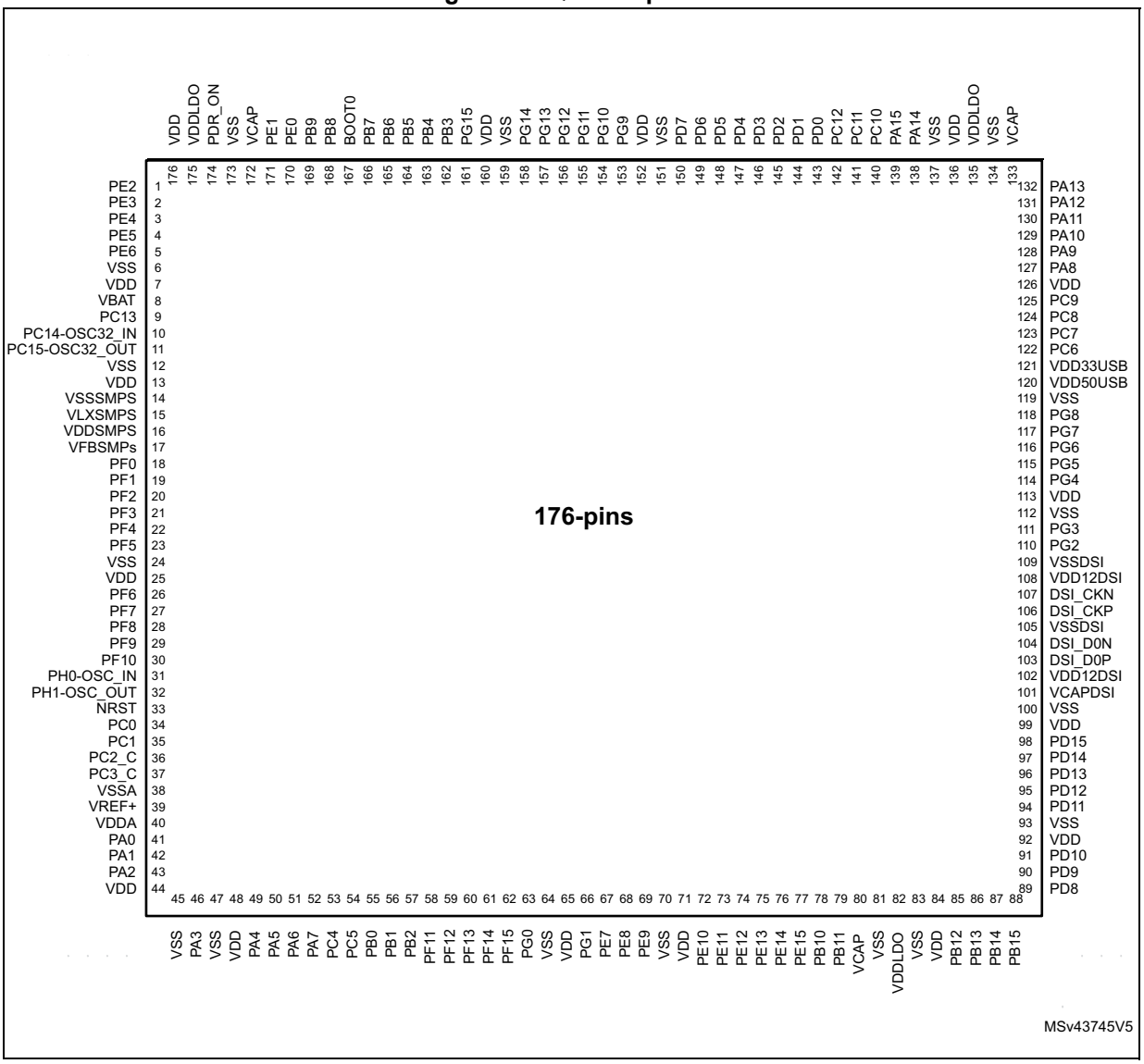

1. The above figure shows the package top view.

Figure 9. LQFP208 pinout

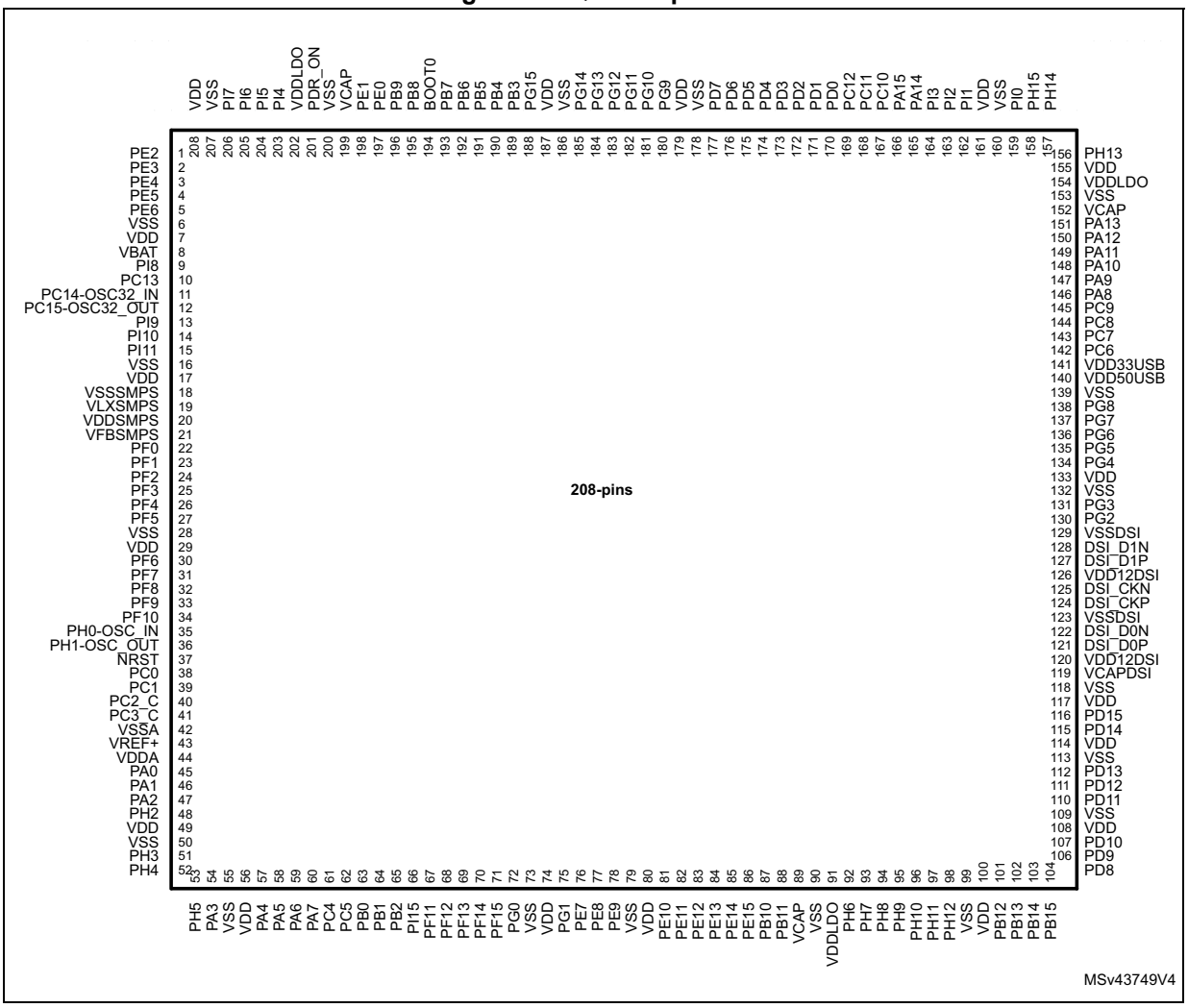

1. The above figure shows the package top view.

Figure 10. TFBGA240+25 ballout

	1	2	3	4	5	6	7	8	9	10	11	12	13	14	15	16	17
A	VSS	PI6	PI5	PI4	PB5	VDD LDO	VCAP	PK5	PG10	PG9	PD5	PD4	PC10	PA15	PI1	PI0	VSS
B	VBAT	VSS	PI7	PE1	PB6	VSS	PB4	PK4	PG11	PJ15	PD6	PD3	PC11	PA14	PI2	PH15	PH14
C	PC15-OSC32_OUT	PC14-OSC32_IN	PE2	PE0	PB7	PB3	PK6	PK3	PG12	VSS	PD7	PC12	VSS	PI3	PA13	VSS	VDD LDO
D	PE5	PE4	PE3	PB9	PB8	PG15	PK7	PG14	PG13	PJ14	PJ12	PD2	PD0	PA10	PA9	PH13	VCAP
E	VLX SMPS	PI9	PC13	PI8	PE6	VDD	PDR_ON	BOOT0	VDD	PJ13	VDD	PD1	PC8	PC9	PA8	PA12	PA11
F	VDD SMPS	VSS SMPS	PI10	PI11	VDD								PC7	PC6	PG8	PG7	VDD 33USB
G	PF2	VFB SMPS	PF1	PF0	VDD		VSS	VSS	VSS	VSS	VSS		VDD	PG5	PG6	VSS	VDD50 USB
H	PI12	PI13	PI14	PF3	VDD		VSS	VSS	VSS	VSS	VSS		VDD	PG4	PG3	PG2	PK2
J	PH1-OSC_OUT	PH0-OSC IN	VSS	PF5	PF4		VSS	VSS	VSS	VSS	VSS		VDD	PK0	PK1	VSS DSI	VSSDSI
K	NRST	PF6	PF7	PF8	VDD		VSS	VSS	VSS	VSS	VSS		VDD	PJ11	VSSDSI	DSI_D1P	DSI_D1N
L	VDDA	PC0	PF10	PF9	VDD		VSS	VSS	VSS	VSS	VSS		VDD	PJ10	VSSDSI	DSI_CKP	DSI_CKN
M	VREF+	PC1	PC2	PC3	VDD								VDD	PJ9	VSSDSI	DSI_D0P	DSI_D0N
N	VREF-	PH2	PA2	PA1	PA0	PJ0	VDD	VDD	PE10	VDD	VDD	VDD	PJ8	PJ7	PJ6	VSS	VCAP DSI
P	VSSA	PH3	PH4	PH5	PI15	PJ1	PF13	PF14	PE9	PE11	PB10	PB11	PH10	PH11	PD15	PD14	VDD DSI
R	PC2_C	PC3_C	PA6	VSS	PA7	PB2	PF12	VSS	PF15	PE12	PE15	PJ5	PH9	PH12	PD11	PD12	PD13
T	PA0_C	PA1_C	PA5	PC4	PB1	PJ2	PF11	PG0	PE8	PE13	PH6	VSS	PH8	PB12	PB15	PD10	PD9
U	VSS	PA3	PA4	PC5	PB0	PJ3	PJ4	PG1	PE7	PE14	VCAP	VDD LDO	PH7	PB13	PB14	PD8	VSS

MSv43743V4

1. The above figure shows the package top view.

Table 7. Legend/abbreviations used in the pinout table

Name		Abbreviation	Definition
Pin name		Unless otherwise specified in brackets below the pin name, the pin function during and after reset is the same as the actual pin name	
Pin type		S	Supply pin
		I	Input only pin
		I/O	Input / output pin
		ANA	Analog-only Input
I/O structure		FT	5 V tolerant I/O
		TT	3.3 V tolerant I/O
		B	Dedicated BOOT0 pin
		RST	Bidirectional reset pin with embedded weak pull-up resistor
		Option for TT and FT I/Os	
		_f	I2C FM+ option
		_a	analog option (supplied by V_{DDA})
		_u	USB option (supplied by $V_{DD33USB}$)
		_h	High-speed low-voltage I/O
Notes		Unless otherwise specified by a note, all I/Os are set as floating inputs during and after reset.	
Pin functions	Alternate functions	Functions selected through GPIOx_AFR registers	
	Additional functions	Functions directly selected/enabled through peripheral registers	

Table 8. STM32H757xI pin/ball definition

Pin/ball name					Pin name (function after reset)	Pin type	I/O structure	Notes	Alternate functions	Additional functions
WLCSP156	UFBGA169	LQFP176	LQFP208	TFBGA240+25						
D9	A2	1	1	C3	PE2	I/O	FT_h	-	TRACECLK, SAI1_CK1, SPI4_SCK, SAI1_MCLK_A, SAI4_MCLK_A, QUADSPI_BK1_IO2, SAI4_CK1, ETH_MII_TXD3, FMC_A23, EVENTOUT	-
D10	C3	2	2	D3	PE3	I/O	FT_h	-	TRACED0, TIM15_BKIN, SAI1_SD_B, SAI4_SD_B, FMC_A19, EVENTOUT	-
B12	D3	3	3	D2	PE4	I/O	FT_h	-	TRACED1, SAI1_D2, DFSDM1_DATIN3, TIM15_CH1N, SPI4_NSS, SAI1_FS_A, SAI4_FS_A, SAI4_D2, FMC_A20, DCMI_D4, LCD_B0, EVENTOUT	-
C11	E4	4	4	D1	PE5	I/O	FT_h	-	TRACED2, SAI1_CK2, DFSDM1_CKIN3, TIM15_CH1, SPI4_MISO, SAI1_SCK_A, SAI4_SCK_A, SAI4_CK2, FMC_A21, DCMI_D6, LCD_G0, EVENTOUT	-
E8	C2	5	5	E5	PE6	I/O	FT_h	-	TRACED3, TIM1_BKIN2, SAI1_D1, TIM15_CH2, SPI4_MOSI, SAI1_SD_A, SAI4_SD_A, SAI4_D1, SAI2_MCLK_B, TIM1_BKIN2_COMP12, FMC_A22, DCMI_D7, LCD_G1, EVENTOUT	-
-	A1	6	6	A1	VSS	S	-	-	-	-
-	A9	7	7	-	VDD	S	-	-	-	-
B13	B1	8	8	B1	VBAT	S	-	-	-	-

Table 8. STM32H757xI pin/ball definition (continued)

Pin/ball name					Pin name (function after reset)	Pin type	I/O structure	Notes	Alternate functions	Additional functions
WLCSP156	UFBGA169	LQFP176	LQFP208	TFBGA240+25						
D11	-	-	-	B2	VSS	S	-	-	-	-
-	-	-	9	E4	PI8	I/O	FT	-	EVENTOUT	RTC_TAMP2/ WKUP3
E9	E3	9	10	E3	PC13	I/O	FT	-	EVENTOUT	RTC_TAMP1/ RTC_TS/WKUP4
C13	C1	10	11	C2	PC14-OSC32_IN (OSC32_IN)(1)	I/O	FT	-	EVENTOUT	OSC32_IN
C12	D2	11	12	C1	PC15-OSC32_OUT(OSC32_OUT) (1)	I/O	FT	-	EVENTOUT	OSC32_OUT
-	-	-	13	E2	PI9	I/O	FT_h	-	UART4_RX, FDCAN1_RX, FMC_D30, LCD_VSYNC, EVENTOUT	-
-	-	-	14	F3	PI10	I/O	FT_h	-	ETH_MII_RX_ER, FMC_D31, LCD_HSYNC, EVENTOUT	-
-	-	-	15	F4	PI11	I/O	FT	-	LCD_G6, OTG_HS_ULPI_DIR, EVENTOUT	WKUP5
-	B4	12	16	A17	VSS	S	-	-	-	-
D13	E2	13	17	E6	VDD	S	-	-	-	-
D12	F2	14	18	F2	VSSSMPS	S	-	-	-	-
E12	E1	15	19	E1	VLXSMPS	S	-	-	-	-
E13	F1	16	20	F1	VDDSMPS	S	-	-	-	-
E11	F3	17	21	G2	VFBSMPS	S	-	-	-	-
E10	F4	18	22	G4	PF0	I/O	FT_f	-	I2C2_SDA, FMC_A0, EVENTOUT	-
F9	F5	19	23	G3	PF1	I/O	FT_f	-	I2C2_SCL, FMC_A1, EVENTOUT	-
F12	F6	20	24	G1	PF2	I/O	FT	-	I2C2_SMBA, FMC_A2, EVENTOUT	-

Table 8. STM32H757xI pin/ball definition (continued)

Pin/ball name					Pin name (function after reset)	Pin type	I/O structure	Notes	Alternate functions	Additional functions
WLCSP156	UFBGA169	LQFP176	LQFP208	TFBGA240+25						
-	-	-	-	H1	PI12	I/O	FT	-	LCD_HSYNC, EVENTOUT	-
-	-	-	-	H2	PI13	I/O	FT	-	LCD_VSYNC, EVENTOUT	-
-	-	-	-	H3	PI14	I/O	FT_h	-	LCD_CLK, EVENTOUT	-
F13	G2	21	25	H4	PF3	I/O	FT_ha	-	FMC_A3, EVENTOUT	ADC3_INP5
F11	G1	22	26	J5	PF4	I/O	FT_ha	-	FMC_A4, EVENTOUT	ADC3_INN5, ADC3_INP9
F10	G3	23	27	J4	PF5	I/O	FT_ha	-	FMC_A5, EVENTOUT	ADC3_INP4
G12	-	24	28	C10	VSS	S	-	-	-	-
G13	H1	25	29	E9	VDD	S	-	-	-	-
-	G4	26	30	K2	PF6	I/O	FT_ha	-	TIM16_CH1, SPI5_NSS, SAI1_SD_B, UART7_RX, SAI4_SD_B, QUADSPI_BK1_IO3, EVENTOUT	ADC3_INN4, ADC3_INP8
-	G5	27	31	K3	PF7	I/O	FT_ha	-	TIM17_CH1, SPI5_SCK, SAI1_MCLK_B, UART7_TX, SAI4_MCLK_B, QUADSPI_BK1_IO2, EVENTOUT	ADC3_INP3
-	G6	28	32	K4	PF8	I/O	FT_ha	-	TIM16_CH1N, SPI5_MISO, SAI1_SCK_B, UART7_RTS/UART7_DE, SAI4_SCK_B, TIM13_CH1, QUADSPI_BK1_IO0, EVENTOUT	ADC3_INN3, ADC3_INP7

Table 8. STM32H757xI pin/ball definition (continued)

Pin/ball name					Pin name (function after reset)	Pin type	I/O structure	Notes	Alternate functions	Additional functions
WLCSP156	UFBGA169	LQFP176	LQFP208	TFBGA240+25						
-	H3	29	33	L4	PF9	I/O	FT_ha	-	TIM17_CH1N, SPI5_MOSI, SAI1_FS_B, UART7_CTS, SAI4_FS_B, TIM14_CH1, QUADSPI_BK1_IO1, EVENTOUT	ADC3_INP2
-	H4	30	34	L3	PF10	I/O	FT_ha	-	TIM16_BKIN, SAI1_D3, QUADSPI_CLK, SAI4_D3, DCMI_D11, LCD_DE, EVENTOUT	ADC3_INN2, ADC3_INP6
H12	J2	31	35	J2	PH0-OSC_IN(PH0)	I/O	FT	-	EVENTOUT	OSC_IN
H13	J1	32	36	J1	PH1-OSC_OUT(PH1)	I/O	FT	-	EVENTOUT	OSC_OUT
H11	H5	33	37	K1	NRST	I/O	RST	-	-	-
G11	J4	34	38	L2	PC0	I/O	FT_a	-	DFSDM1_CKIN0, DFSDM1_DATIN4, SAI2_FS_B, OTG_HS_ULPI_STP, FMC_SDNWE, LCD_R5, EVENTOUT	ADC123_INP10
G10	J3	35	39	M2	PC1	I/O	FT_ha	-	TRACED0, SAI1_D1, DFSDM1_DATIN0, DFSDM1_CKIN4, SPI2_MOSI/I2S2_SDO, SAI1_SD_A, SAI4_SD_A, SDMMC2_CK, SAI4_D1, ETH_MDC, MDIOS_MDC, EVENTOUT	ADC123_INN10, ADC123_INP11, RTC_TAMP3/WKUP6
-	-	-	-	M3(2)	PC2	I/O	FT_a	-	C1DSLEEP, DFSDM1_CKIN1, SPI2_MISO/I2S2_SDI, DFSDM1_CKOUT, OTG_HS_ULPI_DIR, ETH_MII_TXD2, FMC_SDNE0, EVENTOUT	ADC123_INN11, ADC123_INP12
K13(3)	K1(3)	36(3)	40(3)	R1(1)	PC2_C	ANA	TT_a	-		ADC3_INN1, ADC3_INP0

Table 8. STM32H757xI pin/ball definition (continued)

Pin/ball name					Pin name (function after reset)	Pin type	I/O structure	Notes	Alternate functions	Additional functions
WLCSP156	UFBGA169	LQFP176	LQFP208	TFBGA240+25						
-	-	-	-	M4(1)	PC3	I/O	FT_a	-	C1SLEEP, DFSDM1_DATIN1, SPI2_MOSI/I2S2_SDO, OTG_HS_ULPI_NXT, ETH_MII_TX_CLK, FMC_SDCKE0, EVENTOUT	ADC12_INN12, ADC12_INP13
K12(3)	K2(3)	37(3)	41(3)	R2(1)	PC3_C	ANA	TT_a	-		ADC3_INP1
-	M2	-	-	E11	VDD	S	-	-	-	-
-	A12	-	-	C13	VSS	S	-	-	-	-
J13	-	38	42	P1	VSSA	S	-	-	-	-
-	L1	-	-	N1	VREF-	S	-	-	-	-
J12	M1	39	43	M1	VREF+	S	-	-	-	-
J11	L2	40	44	L1	VDDA	S	-	-	-	-
L13	K3	41	45	N5(1)	PA0	I/O	FT_a	-	TIM2_CH1/TIM2_ETR, TIM5_CH1, TIM8_ETR, TIM15_BKIN, USART2_CTS/USART2_NSS, UART4_TX, SDMMC2_CMD, SAI2_SD_B, ETH_MII_CRS, EVENTOUT	ADC1_INP16, WKUP1
-	-	-	-	T1(1)	PA0_C	ANA	TT_a	-		ADC12_INN1, ADC12_INP0
L12	L3	42	46	N4(1)	PA1	I/O	FT_ha	-	TIM2_CH2, TIM5_CH2, LPTIM3_OUT, TIM15_CH1N, USART2_RTS/USART2_DE, UART4_RX, QUADSPI_BK1_IO3, SAI2_MCLK_B, ETH_MII_RX_CLK/ETH_RMII_REF_CLK, LCD_R2, EVENTOUT	ADC1_INN16, ADC1_INP17
-	-	-	-	T2(1)	PA1_C	ANA	TT_a	-		ADC12_INP1
K11	M3	43	47	N3	PA2	I/O	FT_a	-	TIM2_CH3, TIM5_CH3, LPTIM4_OUT, TIM15_CH1, USART2_TX, SAI2_SCK_B, ETH_MDIO, MDIOS_MDIO, LCD_R1, EVENTOUT	ADC12_INP14, WKUP2

Table 8. STM32H757xI pin/ball definition (continued)

Pin/ball name					Pin name (function after reset)	Pin type	I/O structure	Notes	Alternate functions	Additional functions
WLCSP156	UFBGA169	LQFP176	LQFP208	TFBGA240+25						
-	-	-	48	N2	PH2	I/O	FT_ha	-	LPTIM1_IN2, QUADSPI_BK2_IO0, SAI2_SCK_B, ETH_MII_CRS, FMC_SDCKE0, LCD_R0, EVENTOUT	ADC3_INP13
-	-	44	49	F5	VDD	S	-	-	-	-
-	N1	45	50	C16	VSS	S	-	-	-	-
-	-	-	51	P2	PH3	I/O	FT_ha	-	QUADSPI_BK2_IO1, SAI2_MCLK_B, ETH_MII_COL, FMC_SDNE0, LCD_R1, EVENTOUT	ADC3_INN13, ADC3_INP14
-	-	-	52	P3	PH4	I/O	FT_fa	-	I2C2_SCL, LCD_G5, OTG_HS_ULPI_NXT, LCD_G4, EVENTOUT	ADC3_INN14, ADC3_INP15
-	-	-	53	P4	PH5	I/O	FT_fa	-	I2C2_SDA, SPI5_NSS, FMC_SDNWE, EVENTOUT	ADC3_INN15, ADC3_INP16
J10	N2	46	54	U2	PA3	I/O	FT_ha	-	TIM2_CH4, TIM5_CH4, LPTIM5_OUT, TIM15_CH2, USART2_RX, LCD_B2, OTG_HS_ULPI_D0, ETH_MII_COL, LCD_B5, EVENTOUT	ADC12_INP15
L11	-	47	55	-	VSS	S	-	-	-	-
M12	-	48	56	G5	VDD	S	-	-	-	-
K10	N3	49	57	U3	PA4	I/O	TT_a	-	D1PWREN, TIM5_ETR, SPI1_NSS/I2S1_WS, SPI3_NSS/I2S3_WS, USART2_CK, SPI6_NSS, OTG_HS_SOF, DCMI_HSYNC, LCD_VSYNC, EVENTOUT	ADC12_INP18, DAC1_OUT1

Table 8. STM32H757xI pin/ball definition (continued)

Pin/ball name					Pin name (function after reset)	Pin type	I/O structure	Notes	Alternate functions	Additional functions
WLCSP156	UFBGA169	LQFP176	LQFP208	TFBGA240+25						
H10	J5	50	58	T3	PA5	I/O	TT_ha	-	D2PWREN, TIM2_CH1/TIM2_ETR, TIM8_CH1N, SPI1_SCK/I2S1_CK, SPI6_SCK, OTG_HS_ULPI_CK, LCD_R4, EVENTOUT	ADC12_INN18, ADC12_INP19, DAC1_OUT2
G9	M4	51	59	R3	PA6	I/O	FT_a	-	TIM1_BKIN, TIM3_CH1, TIM8_BKIN, SPI1_MISO/I2S1_SDI, SPI6_MISO, TIM13_CH1, TIM8_BKIN_COMP12, MDIOS_MDC, TIM1_BKIN_COMP12, DCMI_PIXCLK, LCD_G2, EVENTOUT	ADC12_INP3
J9	K4	52	60	R5	PA7	I/O	TT_a	-	TIM1_CH1N, TIM3_CH2, TIM8_CH1N, SPI1_MOSI/I2S1_SDO, SPI6_MOSI, TIM14_CH1, ETH_MII_RX_DV/ETH_RMII_CRS_DV, FMC_SDNWE, EVENTOUT	ADC12_INN3, ADC12_INP7, OPAMP1_VINM
M11	L4	53	61	T4	PC4	I/O	TT_a	-	C2DSLEEP, DFSDM1_CKIN2, I2S1_MCK, SPDIFRX1_IN3, ETH_MII_RXD0/ETH_RMII_RXD0, FMC_SDNE0, EVENTOUT	ADC12_INP4, OPAMP1_VOUT, COMP1_INM

Table 8. STM32H757xI pin/ball definition (continued)

Pin/ball name					Pin name (function after reset)	Pin type	I/O structure	Notes	Alternate functions	Additional functions
WLCSP156	UFBGA169	LQFP176	LQFP208	TFBGA240+25						
L10	K5	54	62	U4	PC5	I/O	TT_a	-	C2SLEEP, SAI1_D3, DFSDM1_DATIN2, SPDIFRX1_IN4, SAI4_D3, ETH_MII_RXD1/ETH_RMII_RXD1, FMC_SDCKE0, COMP1_OUT, EVENTOUT	ADC12_INN4, ADC12_INP8, OPAMP1_VINM
-	-	-	-	G13	VDD	S	-	-	-	-
-	H2	-	-	R4	VSS	S	-	-	-	-
K9	N4	55	63	U5	PB0	I/O	FT_a	-	TIM1_CH2N, TIM3_CH3, TIM8_CH2N, DFSDM1_CKOUT, UART4_CTS, LCD_R3, OTG_HS_ULPI_D1, ETH_MII_RXD2, LCD_G1, EVENTOUT	ADC12_INN5, ADC12_INP9, OPAMP1_VINP, COMP1_INP
H9	H6	56	64	T5	PB1	I/O	TT_a	-	TIM1_CH3N, TIM3_CH4, TIM8_CH3N, DFSDM1_DATIN1, LCD_R6, OTG_HS_ULPI_D2, ETH_MII_RXD3, LCD_G0, EVENTOUT	ADC12_INP5, COMP1_INM
M10	L5	57	65	R6	PB2	I/O	FT_ha	-	RTC_OUT, SAI1_D1, DFSDM1_CKIN1, SAI1_SD_A, SPI3_MOSI/I2S3_SDO, SAI4_SD_A, QUADSPI_CLK, SAI4_D1, EVENTOUT	COMP1_INP
-	-	-	66	P5	PI15	I/O	FT	-	LCD_G2, LCD_R0, EVENTOUT	-
-	-	-	-	N6	PJ0	I/O	FT	-	LCD_R7, LCD_R1, EVENTOUT	-
-	-	-	-	P6	PJ1	I/O	FT	-	LCD_R2, EVENTOUT	-
-	-	-	-	T6	PJ2	I/O	FT	-	DSI_TE, LCD_R3, EVENTOUT	-

Table 8. STM32H757xI pin/ball definition (continued)

Pin/ball name					Pin name (function after reset)	Pin type	I/O structure	Notes	Alternate functions	Additional functions
WLCSP156	UFBGA169	LQFP176	LQFP208	TFBGA240+25						
-	-	-	-	U6	PJ3	I/O	FT	-	LCD_R4, EVENTOUT	-
-	-	-	-	U7	PJ4	I/O	FT	-	LCD_R5, EVENTOUT	-
F8	K6	58	67	T7	PF11	I/O	FT_a	-	SPI5_MOSI, SAI2_SD_B, FMC_SDNRAS, DCMI_D12, EVENTOUT	ADC1_INP2
G8	J6	59	68	R7	PF12	I/O	FT_ha	-	FMC_A6, EVENTOUT	ADC1_INN2, ADC1_INP6
L9	-	-	-	J3	VSS	S	-	-	-	-
M9	-	-	-	H5	VDD	S	-	-	-	-
H8	M5	60	69	P7	PF13	I/O	FT_ha	-	DFSDM1_DATIN6, I2C4_SMBA, FMC_A7, EVENTOUT	ADC2_INP2
K8	N5	61	70	P8	PF14	I/O	FT_fha	-	DFSDM1_CKIN6, I2C4_SCL, FMC_A8, EVENTOUT	ADC2_INN2, ADC2_INP6
J8	M7	62	71	R9	PF15	I/O	FT_fh	-	I2C4_SDA, FMC_A9, EVENTOUT	-
L8	L6	63	72	T8	PG0	I/O	FT_h	-	FMC_A10, EVENTOUT	-
-	M9	64	73	J16	VSS	S	-	-	-	-
-	-	65	74	H13	VDD	S	-	-	-	-
M8	J7	66	75	U8	PG1	I/O	TT_h	-	FMC_A11, EVENTOUT	OPAMP2_VINM
H7	K7	67	76	U9	PE7	I/O	TT_ha	-	TIM1_ETR, DFSDM1_DATIN2, UART7_RX, QUADSPI_BK2_IO0, FMC_D4/FMC_DA4, EVENTOUT	OPAMP2_VOUT, COMP2_INM
J7	L8	68	77	T9	PE8	I/O	TT_ha	-	TIM1_CH1N, DFSDM1_CKIN2, UART7_TX, QUADSPI_BK2_IO1, FMC_D5/FMC_DA5, COMP2_OUT, EVENTOUT	OPAMP2_VINM

Table 8. STM32H757xI pin/ball definition (continued)

Pin/ball name					Pin name (function after reset)	Pin type	I/O structure	Notes	Alternate functions	Additional functions
WLCSP156	UFBGA169	LQFP176	LQFP208	TFBGA240+25						
K7	N6	69	78	P9	PE9	I/O	TT_ha	-	TIM1_CH1, DFSDM1_CKOUT, UART7_RTS/UART7_DE, QUADSPI_BK2_IO2, FMC_D6/FMC_DA6, EVENTOUT	OPAMP2_VINP, COMP2_INP
L7	M6	70	79	J17	VSS	S	-	-	-	-
M7	-	71	80	J13	VDD	S	-	-	-	-
G7	L7	72	81	N9	PE10	I/O	FT_ha	-	TIM1_CH2N, DFSDM1_DATIN4, UART7_CTS, QUADSPI_BK2_IO3, FMC_D7/FMC_DA7, EVENTOUT	COMP2_INM
G6	N7	73	82	P10	PE11	I/O	FT_ha	-	TIM1_CH2, DFSDM1_CKIN4, SPI4_NSS, SAI2_SD_B, FMC_D8/FMC_DA8, LCD_G3, EVENTOUT	COMP2_INP
J6	J8	74	83	R10	PE12	I/O	FT_h	-	TIM1_CH3N, DFSDM1_DATIN5, SPI4_SCK, SAI2_SCK_B, FMC_D9/FMC_DA9, COMP1_OUT, LCD_B4, EVENTOUT	-
K6	H8	75	84	T10	PE13	I/O	FT_h	-	TIM1_CH3, DFSDM1_CKIN5, SPI4_MISO, SAI2_FS_B, FMC_D10/FMC_DA10, COMP2_OUT, LCD_DE, EVENTOUT	-
-	-	-	-	T12	VSS	S	-	-	-	-
-	-	-	-	K13	VDD	S	-	-	-	-
M6	M8	76	85	U10	PE14	I/O	FT_h	-	TIM1_CH4, SPI4_MOSI, SAI2_MCLK_B, FMC_D11/FMC_DA11, LCD_CLK, EVENTOUT	-

Table 8. STM32H757xI pin/ball definition (continued)

Pin/ball name					Pin name (function after reset)	Pin type	I/O structure	Notes	Alternate functions	Additional functions
WLCSP156	UFBGA169	LQFP176	LQFP208	TFBGA240+25						
L6	K8	77	86	R11	PE15	I/O	FT_h	-	TIM1_BKIN, COMP_TIM1_BKIN, FMC_D12/FMC_DA12, TIM1_BKIN_COMP12, LCD_R7, EVENTOUT	-
H6	K9	78	87	P11	PB10	I/O	FT_f	-	TIM2_CH3, HRTIM_SCOUT, LPTIM2_IN1, I2C2_SCL, SPI2_SCK/I2S2_CK, DFSDM1_DATIN7, USART3_TX, QUADSPI_BK1_NCS, OTG_HS_ULPI_D3, ETH_MII_RX_ER, LCD_G4, EVENTOUT	-
K5	N8	79	88	P12	PB11	I/O	FT_f	-	TIM2_CH4, HRTIM_SCIN, LPTIM2_ETR, I2C2_SDA, DFSDM1_CKIN7, USART3_RX, OTG_HS_ULPI_D4, ETH_MII_TX_EN/ETH_RMII_TX_EN, DSI_TE, LCD_G5, EVENTOUT	-
M5	N9	80	89	U11	VCAP	S	-	-	-	-
L5	-	81	90	-	VSS	S	-	-	-	-
L4	N10	82	91	U12	VDDLDO	S	-	-	-	-
M4	-	-	-	L13	VDD	S	-	-	-	-
-	-	-	-	R12	PJ5	I/O	FT	-	LCD_R6, EVENTOUT	-
-	-	-	92	T11	PH6	I/O	FT	-	TIM12_CH1, I2C2_SMBA, SPI5_SCK, ETH_MII_RXD2, FMC_SDNE1, DCMI_D8, EVENTOUT	-
-	-	-	93	U13	PH7	I/O	FT_fa	-	I2C3_SCL, SPI5_MISO, ETH_MII_RXD3, FMC_SDCKE1, DCMI_D9, EVENTOUT	-

Table 8. STM32H757xI pin/ball definition (continued)

Pin/ball name					Pin name (function after reset)	Pin type	I/O structure	Notes	Alternate functions	Additional functions
WLCSP156	UFBGA169	LQFP176	LQFP208	TFBGA240+25						
-	-	-	94	T13	PH8	I/O	FT_fha	-	TIM5_ETR, I2C3_SDA, FMC_D16, DCMI_HSYNC, LCD_R2, EVENTOUT	-
-	E13	-	-	-	VSS	S	-	-	-	-
M4	L9	-	-	M13	VDD	S	-	-	-	-
-	-	-	95	R13	PH9	I/O	FT_h	-	TIM12_CH2, I2C3_SMBA, FMC_D17, DCMI_D0, LCD_R3, EVENTOUT	-
-	-	-	96	P13	PH10	I/O	FT_h	-	TIM5_CH1, I2C4_SMBA, FMC_D18, DCMI_D1, LCD_R4, EVENTOUT	-
-	-	-	97	P14	PH11	I/O	FT_fh	-	TIM5_CH2, I2C4_SCL, FMC_D19, DCMI_D2, LCD_R5, EVENTOUT	-
-	-	-	98	R14	PH12	I/O	FT_fh	-	TIM5_CH3, I2C4_SDA, FMC_D20, DCMI_D3, LCD_R6, EVENTOUT	-
-	D1	83	99	N16	VSS	S	-	-	-	-
M4	-	84	100	-	VDD	S	-	-	-	-
J5	L10	85	101	T14	PB12(4)	I/O	FT_u	-	TIM1_BKIN, I2C2_SMBA, SPI2_NSS/I2S2_WS, DFSDM1_DATIN1, USART3_CK, FDCAN2_RX, OTG_HS_ULPI_D5, ETH_MII_TXD0/ETH_RMII_TXD0, OTG_HS_ID, TIM1_BKIN_COMP12, UART5_RX, EVENTOUT	-

Table 8. STM32H757xI pin/ball definition (continued)

Pin/ball name					Pin name (function after reset)	Pin type	I/O structure	Notes	Alternate functions	Additional functions
WLCSP156	UFBGA169	LQFP176	LQFP208	TFBGA240+25						
H5	M10	86	102	U14	PB13(4)	I/O	FT_u	-	TIM1_CH1N, LPTIM2_OUT, SPI2_SCK/I2S2_CK, DFSDM1_CKIN1, USART3_CTS/USART3_NSS, FDCAN2_TX, OTG_HS_ULPI_D6, ETH_MII_TXD1/ETH_RMII_TXD1, UART5_TX, EVENTOUT	OTG_HS_VBUS
M3	N11	87	103	U15	PB14	I/O	FT_u	-	TIM1_CH2N, TIM12_CH1, TIM8_CH2N, USART1_TX, SPI2_MISO/I2S2_SDI, DFSDM1_DATIN2, USART3_RTS/USART3_DE, UART4_RTS/UART4_DE, SDMMC2_D0, OTG_HS_DM, EVENTOUT	-
M2	M11	88	104	T15	PB15	I/O	FT_u	-	RTC_REFIN, TIM1_CH3N, TIM12_CH2, TIM8_CH3N, USART1_RX, SPI2_MOSI/I2S2_SDO, DFSDM1_CKIN2, UART4_CTS, SDMMC2_D1, OTG_HS_DP, EVENTOUT	-
G5	N12	89	105	U16	PD8	I/O	FT_h	-	DFSDM1_CKIN3, SAI3_SCK_B, USART3_TX, SPDIFRX1_IN2, FMC_D13/FMC_DA13, EVENTOUT	-

Table 8. STM32H757xI pin/ball definition (continued)

Pin/ball name					Pin name (function after reset)	Pin type	I/O structure	Notes	Alternate functions	Additional functions
WLCSP156	UFBGA169	LQFP176	LQFP208	TFBGA240+25						
K4	M12	90	106	T17	PD9	I/O	FT_h	-	DFSDM1_DATIN3, SAI3_SD_B, USART3_RX, FMC_D14/FMC_DA14, EVENTOUT	-
L3	N13	91	107	T16	PD10	I/O	FT_h	-	DFSDM1_CKOUT, SAI3_FS_B, USART3_CK, FMC_D15/FMC_DA15, LCD_B3, EVENTOUT	
-	L11	92	108	N12	VDD	S	-	-	-	-
M1	L13	93	109	U17	VSS	S	-	-	-	-
J4	K10	94	110	R15	PD11	I/O	FT_h	-	LPTIM2_IN2, I2C4_SMBA, USART3_CTS/USART3_NSS, QUADSPI_BK1_IO0, SAI2_SD_A, FMC_A16, EVENTOUT	-
L2	J10	95	111	R16	PD12	I/O	FT_fh	-	LPTIM1_IN1, TIM4_CH1, LPTIM2_IN1, I2C4_SCL, USART3_RTS/ USART3_DE, QUADSPI_BK1_IO1, SAI2_FS_A, FMC_A17, EVENTOUT	-
K3	J9	96	112	R17	PD13	I/O	FT_fh	-	LPTIM1_OUT, TIM4_CH2, I2C4_SDA, QUADSPI_BK1_IO3, SAI2_SCK_A, FMC_A18, EVENTOUT	-
L1	-	-	113	-	VSS	S	-	-	-	-
-	-	-	114	N11	VDD	S	-	-	-	-
H4	H9	97	115	P16	PD14	I/O	FT_h	-	TIM4_CH3, SAI3_MCLK_B, UART8_CTS, FMC_D0/FMC_DA0, EVENTOUT	-

Table 8. STM32H757xI pin/ball definition (continued)

Pin/ball name					Pin name (function after reset)	Pin type	I/O structure	Notes	Alternate functions	Additional functions
WLCSP156	UFBGA169	LQFP176	LQFP208	TFBGA240+25						
J3	H10	98	116	P15	PD15	I/O	FT_h	-	TIM4_CH4, SAI3_MCLK_A, UART8_RTS/ UART8_DE, FMC_D1/FMC_DA1, EVENTOUT	-
-	-	-	-	N15	PJ6	I/O	FT	-	TIM8_CH2, LCD_R7, EVENTOUT	-
-	-	-	-	N14	PJ7	I/O	FT	-	TRGIN, TIM8_CH2N, LCD_G0, EVENTOUT	-
K2	-	-	-	N10	VDD	S	-	-	-	-
-	C12	-	-	R8	VSS	S	-	-	-	-
-	-	-	-	N13	PJ8	I/O	FT	-	TIM1_CH3N, TIM8_CH1, UART8_TX, LCD_G1, EVENTOUT	-
-	-	-	-	M14	PJ9	I/O	FT	-	TIM1_CH3, TIM8_CH1N, UART8_RX, LCD_G2, EVENTOUT	-
-	-	-	-	L14	PJ10	I/O	FT	-	TIM1_CH2N, TIM8_CH2, SPI5_MOSI, LCD_G3, EVENTOUT	-
-	-	-	-	K14	PJ11	I/O	FT	-	TIM1_CH2, TIM8_CH2N, SPI5_MISO, LCD_G4, EVENTOUT	-
-	-	99	117	N8	VDD	S	-	-	-	-
-	M13	-	-	P17	VDDDSI	S	-	-	-	-
-	-	100	118	U1	VSS	S	-	-	-	-
K1	L12	101	119	N17	VCAPDSI	S	-	-	-	-
-	-	102	120	-	VDD12DSI	S	-	-	-	-
J2	K12	103	121	M16	DSI_D0P	I/O	TT	-	-	-
J1	K13	104	122	M17	DSI_D0N	I/O	TT	-	-	-
H3	G12	105	123	K15	VSSDSI	S	-	-	-	-
H2	J12	106	124	L16	DSI_CKP	I/O	TT	-	-	-
H1	J13	107	125	L17	DSI_CKN	I/O	TT	-	-	-

Table 8. STM32H757xI pin/ball definition (continued)

Pin/ball name					Pin name (function after reset)	Pin type	I/O structure	Notes	Alternate functions	Additional functions
WLCSP156	UFBGA169	LQFP176	LQFP208	TFBGA240+25						
-	-	108	126	-	VDD12DSI	S	-	-	-	-
G2	H12	-	127	K16	DSI_D1P	I/O	TT	-	-	-
G1	H13	-	128	K17	DSI_D1N	I/O	TT	-	-	-
-	G13	109	129	L15	VSSDSI	S	-	-	-	-
-	-	-	-	J14	PK0	I/O	FT	-	TIM1_CH1N, TIM8_CH3, SPI5_SCK, LCD_G5, EVENTOUT	-
-	-	-	-	J15	PK1	I/O	FT	-	TIM1_CH1, TIM8_CH3N, SPI5_NSS, LCD_G6, EVENTOUT	-
-	-	-	-	H17	PK2	I/O	FT	-	TIM1_BKIN, TIM8_BKIN, TIM8_BKIN_COMP12, TIM1_BKIN_COMP12, LCD_G7, EVENTOUT	-
G3	H7	110	130	H16	PG2	I/O	FT_h	-	TIM8_BKIN, TIM8_BKIN_COMP12, FMC_A12, EVENTOUT	-
G4	G8	111	131	H15	PG3	I/O	FT_h	-	TIM8_BKIN2, TIM8_BKIN2_COMP12, FMC_A13, EVENTOUT	-
-	-	112	132	-	VSS	S	-	-	-	-
-	E12	113	133	N7	VDD	S	-	-	-	-
F4	G10	114	134	H14	PG4	I/O	FT_h	-	TIM1_BKIN2, TIM1_BKIN2_COMP12, FMC_A14/FMC_BA0, EVENTOUT	-
F1	G9	115	135	G14	PG5	I/O	FT_h	-	TIM1_ETR, FMC_A15/FMC_BA1, EVENTOUT	-
-	G11	116	136	G15	PG6	I/O	FT_h	-	TIM17_BKIN, HRTIM_CHE1, QUADSPI_BK1_NCS, FMC_NE3, DCMI_D12, LCD_R7, EVENTOUT	-

Table 8. STM32H757xI pin/ball definition (continued)

Pin/ball name					Pin name (function after reset)	Pin type	I/O structure	Notes	Alternate functions	Additional functions
WLCSP156	UFBGA169	LQFP176	LQFP208	TFBGA240+25						
-	F8	117	137	F16	PG7	I/O	FT_h	-	HRTIM_CHE2, SAI1_MCLK_A, USART6_CK, FMC_INT, DCMI_D13, LCD_CLK, EVENTOUT	-
F2	F9	118	138	F15	PG8	I/O	FT_h	-	TIM8_ETR, SPI6_NSS, USART6_RTS/USART6_DE, SPDIFRX1_IN3, ETH_PPS_OUT, FMC_SDCLK, LCD_G7, EVENTOUT	-
F3	-	119	139	G16	VSS	S	-	-	-	-
E3	F12	120	140	G17	VDD50USB(5)	S	-	-	-	-
E1	F13	121	141	F17	VDD33USB	S	-	-	-	-
E2	-	-	-	M5	VDD	S	-	-	-	-
F5	F11	122	142	F14	PC6	I/O	FT_h	-	HRTIM_CHA1, TIM3_CH1, TIM8_CH1, DFSDM1_CKIN3, I2S2_MCK, USART6_TX, SDMMC1_D0DIR, FMC_NWAIT, SDMMC2_D6, SDMMC1_D6, DCMI_D0, LCD_HSYNC, EVENTOUT	SWPMI_IO
E4	E10	123	143	F13	PC7	I/O	FT_h	-	TRGIO, HRTIM_CHA2, TIM3_CH2, TIM8_CH2, DFSDM1_DATIN3, I2S3_MCK, USART6_RX, SDMMC1_D123DIR, FMC_NE1, SDMMC2_D7, SWPMI_TX, SDMMC1_D7, DCMI_D1, LCD_G6, EVENTOUT	-

Table 8. STM32H757xI pin/ball definition (continued)

Pin/ball name					Pin name (function after reset)	Pin type	I/O structure	Notes	Alternate functions	Additional functions
WLCSP156	UFBGA169	LQFP176	LQFP208	TFBGA240+25						
D1	F10	124	144	E13	PC8	I/O	FT_h	-	TRACED1, HRTIM_CHB1, TIM3_CH3, TIM8_CH3, USART6_CK, UART5_RTS/ UART5_DE, FMC_NE2/FMC_NCE, SWPMI_RX, SDMMC1_D0, DCMI_D2, EVENTOUT	-
D2	E11	125	145	E14	PC9	I/O	FT_fh	-	MCO2, TIM3_CH4, TIM8_CH4, I2C3_SDA, I2S_CKIN, UART5_CTS, QUADSPI_BK1_IO0, LCD_G3, SWPMI_SUSPEND, SDMMC1_D1, DCMI_D3, LCD_B2, EVENTOUT	-
-	-	126	-	L5	VDD	S	-	-	-	-
D3	D10	127	146	E15	PA8	I/O	FT_fha	-	MCO1, TIM1_CH1, HRTIM_CHB2, TIM8_BKIN2, I2C3_SCL, USART1_CK, OTG_FS_SOF, UART7_RX, TIM8_BKIN2_COMP12, LCD_B3, LCD_R6, EVENTOUT	-
D4	D11	128	147	D15	PA9	I/O	FT_u	-	TIM1_CH2, HRTIM_CHC1, LPUART1_TX, I2C3_SMBA, SPI2_SCK/I2S2_CK, USART1_TX, DCMI_D0, LCD_R5, ETH_TX_ER, EVENTOUT	OTG_FS_VBUS

Table 8. STM32H757xI pin/ball definition (continued)

Pin/ball name					Pin name (function after reset)	Pin type	I/O structure	Notes	Alternate functions	Additional functions
WLCSP156	UFBGA169	LQFP176	LQFP208	TFBGA240+25						
C2	A13	129	148	D14	PA10	I/O	FT_u	-	TIM1_CH3, HRTIM_CHC2, LPUART1_RX, USART1_RX, OTG_FS_ID, MDIOS_MDIO, LCD_B4, DCMI_D1, LCD_B1, EVENTOUT	-
C1	D12	130	149	E17	PA11	I/O	FT_u	-	TIM1_CH4, HRTIM_CHD1, LPUART1_CTS, SPI2_NSS/I2S2_WS, UART4_RX, USART1_CTS/USART1_NSS, FDCAN1_RX, OTG_FS_DM, LCD_R4, EVENTOUT	-
B1	D13	131	150	E16	PA12	I/O	FT_u	-	TIM1_ETR, HRTIM_CHD2, LPUART1_RTS/ LPUART1_DE, SPI2_SCK/I2S2_CK, UART4_TX, USART1_RTS/ USART1_DE, SAI2_FS_B, FDCAN1_TX, OTG_FS_DP, LCD_R5, EVENTOUT	-
C3	B11	132	151	C15	PA13(JTMS/ SWDIO)	I/O	FT	-	JTMS-SWDIO, EVENTOUT	-
B2	C13	133	152	D17	VCAP	S	-	-	-	-
A1	-	134	153	-	VSS	S	-	-	-	-
A2	B13	135	154	C17	VDDLDO		-	-	-	-
B3	-	136	155	K5	VDD	S	-	-	-	-
-	-	-	156	D16	PH13	I/O	FT_h	-	TIM8_CH1N, UART4_TX, FDCAN1_TX, FMC_D21, LCD_G2, EVENTOUT	-

Table 8. STM32H757xI pin/ball definition (continued)

Pin/ball name					Pin name (function after reset)	Pin type	I/O structure	Notes	Alternate functions	Additional functions
WLCSP156	UFBGA169	LQFP176	LQFP208	TFBGA240+25						
-	-	-	157	B17	PH14	I/O	FT_h	-	TIM8_CH2N, UART4_RX, FDCAN1_RX, FMC_D22, DCMI_D4, LCD_G3, EVENTOUT	-
-	-	-	158	B16	PH15	I/O	FT_h	-	TIM8_CH3N, FMC_D23, DCMI_D11, LCD_G4, EVENTOUT	-
-	-	-	159	A16	PI0	I/O	FT_h	-	TIM5_CH4, SPI2_NSS/I2S2_WS, FMC_D24, DCMI_D13, LCD_G5, EVENTOUT	-
-	-	-	160	-	VSS	S	-	-	-	-
-	B12	-	161	VDD	VDD	S	-	-	-	-
-	-	-	162	A15	PI1	I/O	FT_h	-	TIM8_BKIN2, SPI2_SCK/I2S2_CK, TIM8_BKIN2_COMP12, FMC_D25, DCMI_D8, LCD_G6, EVENTOUT	-
-	-	-	163	B15	PI2	I/O	FT_h	-	TIM8_CH4, SPI2_MISO/I2S2_SDI, FMC_D26, DCMI_D9, LCD_G7, EVENTOUT	-
-	-	-	164	C14	PI3	I/O	FT_h	-	TIM8_ETR, SPI2_MOSI/I2S2_SDO, FMC_D27, DCMI_D10, EVENTOUT	-
C4	-	137	-	-	VSS	S	-	-	-	-
B3	-	-	-	VDD	VDD	S	-	-	-	-
E5	A11	138	165	B14	PA14(JTCK/ SWCLK)	I/O	FT	-	JTCK-SWCLK, EVENTOUT	-
A3	B10	139	166	A14	PA15(JTDI)	I/O	FT	-	JTDI, TIM2_CH1/TIM2_ETR, HRTIM_FLT1, CEC, SPI1_NSS/I2S1_WS, SPI3_NSS/I2S3_WS, SPI6_NSS, UART4_RTS/UART4_DE, UART7_TX, DSI_TE, EVENTOUT	-

Table 8. STM32H757xI pin/ball definition (continued)

Pin/ball name					Pin name (function after reset)	Pin type	I/O structure	Notes	Alternate functions	Additional functions
WLCSP156	UFBGA169	LQFP176	LQFP208	TFBGA240+25						
D5	C11	140	167	A13	PC10	I/O	FT_ha	-	HRTIM_EEV1, DFSDM1_CKIN5, SPI3_SCK/I2S3_CK, USART3_TX, UART4_TX, QUADSPI_BK1_IO1, SDMMC1_D2, DCMI_D8, LCD_R2, EVENTOUT	-
C5	E9	141	168	B13	PC11	I/O	FT_h	-	HRTIM_FLT2, DFSDM1_DATIN5, SPI3_MISO/I2S3_SDI, USART3_RX, UART4_RX, QUADSPI_BK2_NCS, SDMMC1_D3, DCMI_D4, EVENTOUT	-
B4	D9	142	169	C12	PC12	I/O	FT_h	-	TRACED3, HRTIM_EEV2, SPI3_MOSI/I2S3_SDO, USART3_CK, UART5_TX, SDMMC1_CK, DCMI_D9, EVENTOUT	-
-	A7	-	-	-	VSS	S	-	-	-	-
-	-	-	-	VDD	VDD	S	-	-	-	-
A4	C10	143	170	D13	PD0	I/O	FT_h	-	DFSDM1_CKIN6, SAI3_SCK_A, UART4_RX, FDCAN1_RX, FMC_D2/FMC_DA2, EVENTOUT	-
F6	C9	144	171	E12	PD1	I/O	FT_h	-	DFSDM1_DATIN6, SAI3_SD_A, UART4_TX, FDCAN1_TX, FMC_D3/FMC_DA3, EVENTOUT	-
E6	E8	145	172	D12	PD2	I/O	FT_h	-	TRACED2, TIM3_ETR, UART5_RX, SDMMC1_CMD, DCMI_D11, EVENTOUT	-

Table 8. STM32H757xI pin/ball definition (continued)

Pin/ball name					Pin name (function after reset)	Pin type	I/O structure	Notes	Alternate functions	Additional functions
WLCSP156	UFBGA169	LQFP176	LQFP208	TFBGA240+25						
B5	A10	146	173	B12	PD3	I/O	FT_h	-	DFSDM1_CKOUT, SPI2_SCK/I2S2_CK, USART2_CTS/USART2_NSS, FMC_CLK, DCMI_D5, LCD_G7, EVENTOUT	-
A5	D8	147	174	A12	PD4	I/O	FT_h	-	HRTIM_FLT3, SAI3_FS_A, USART2_RTS/USART2_DE, FMC_NOE, EVENTOUT	-
F7	C8	148	175	A11	PD5	I/O	FT_h	-	HRTIM_EEV3, USART2_TX, FMC_NWE, EVENTOUT	-
B6	-	-	-	-	VSS	S	-	-	-	-
A6	B2	-	-	VDD	VDD	S	-	-	-	-
C6	B8	149	176	B11	PD6	I/O	FT_h	-	SAI1_D1, DFSDM1_CKIN4, DFSDM1_DATIN1, SPI3_MOSI/I2S3_SDO, SAI1_SD_A, USART2_RX, SAI4_SD_A, SAI4_D1, SDMMC2_CK, FMC_NWAIT, DCMI_D10, LCD_B2, EVENTOUT	-
D6	A8	150	177	C11	PD7	I/O	FT_h	-	DFSDM1_DATIN4, SPI1_MOSI/I2S1_SDO, DFSDM1_CKIN1, USART2_CK, SPDIFRX1_IN0, SDMMC2_CMD, FMC_NE1, EVENTOUT	-
-	-	-	-	D11	PJ12	I/O	FT	-	TRGOUT, LCD_G3, LCD_B0, EVENTOUT	-
-	-	-	-	E10	PJ13	I/O	FT	-	LCD_B4, LCD_B1, EVENTOUT	-
-	-	-	-	D10	PJ14	I/O	FT	-	LCD_B2, EVENTOUT	-
-	-	-	-	B10	PJ15	I/O	FT	-	LCD_B3, EVENTOUT	-

Table 8. STM32H757xI pin/ball definition (continued)

Pin/ball name					Pin name (function after reset)	Pin type	I/O structure	Notes	Alternate functions	Additional functions
WLCSP156	UFBGA169	LQFP176	LQFP208	TFBGA240+25						
B9	B9	151	178	-	VSS	S	-	-	-	-
-	-	152	179	VDD	VDD	S	-	-	-	-
-	C7	153	180	A10	PG9	I/O	FT_h	-	SPI1_MISO/I2S1_SDI, USART6_RX, SPDIFRX1_IN4, QUADSPI_BK2_IO2, SAI2_FS_B, FMC_NE2/FMC_NCE, DCMI_VSYNC, EVENTOUT	-
-	D7	154	181	A9	PG10	I/O	FT_h	-	HRTIM_FLT5, SPI1_NSS/I2S1_WS, LCD_G3, SAI2_SD_B, FMC_NE3, DCMI_D2, LCD_B2, EVENTOUT	-
-	E7	155	182	B9	PG11	I/O	FT_h	-	LPTIM1_IN2, HRTIM_EEV4, SPI1_SCK/I2S1_CK, SPDIFRX1_IN1, SDMMC2_D2, ETH_MII_TX_EN/ETH_RMII_TX_EN, DCMI_D3, LCD_B3, EVENTOUT	-
-	G7	156	183	C9	PG12	I/O	FT_h	-	LPTIM1_IN1, HRTIM_EEV5, SPI6_MISO, USART6_RTS/USART6_DE, SPDIFRX1_IN2, LCD_B4, ETH_MII_TXD1/ETH_RMII_TXD1, FMC_NE4, LCD_B1, EVENTOUT	-
-	F7	157	184	D9	PG13	I/O	FT_h	-	TRACED0, LPTIM1_OUT, HRTIM_EEV10, SPI6_SCK, USART6_CTS/USART6_NSS, ETH_MII_TXD0/ETH_RMII_TXD0, FMC_A24, LCD_R0, EVENTOUT	-

Table 8. STM32H757xI pin/ball definition (continued)

Pin/ball name					Pin name (function after reset)	Pin type	I/O structure	Notes	Alternate functions	Additional functions
WLCSP156	UFBGA169	LQFP176	LQFP208	TFBGA240+25						
-	E6	158	185	D8	PG14	I/O	FT_h	-	TRACED1, LPTIM1_ETR, SPI6_MOSI, USART6_TX, QUADSPI_BK2_IO3, ETH_MII_TXD1/ETH_RMII_TXD1, FMC_A25, LCD_B0, EVENTOUT	-
-	-	159	186	-	VSS	S	-	-	-	-
-	-	160	187	VDD	VDD	S	-	-	-	-
-	-	-	-	C8	PK3	I/O	FT	-	LCD_B4, EVENTOUT	-
-	-	-	-	B8	PK4	I/O	FT	-	LCD_B5, EVENTOUT	-
-	-	-	-	A8	PK5	I/O	FT	-	LCD_B6, EVENTOUT	-
-	-	-	-	C7	PK6	I/O	FT	-	LCD_B7, EVENTOUT	-
-	-	-	-	D7	PK7	I/O	FT	-	LCD_DE, EVENTOUT	-
-	B7	-	-	VDD	VDD	S		-	-	-
A7	C6	161	188	D6	PG15	I/O	FT_h	-	USART6_CTS/USART6_NSS, FMC_SDNCAS, DCMI_D13, EVENTOUT	-
B7	A6	162	189	C6	PB3(JTDO/TRACESWO)	I/O	FT	-	JTDO/TRACESWO, TIM2_CH2, HRTIM_FLT4, SPI1_SCK/I2S1_CK, SPI3_SCK/I2S3_CK, SPI6_SCK, SDMMC2_D2, CRS_SYNC, UART7_RX, EVENTOUT	-
A8	B6	163	190	B7	PB4(NJTRST)	I/O	FT	-	NJTRST, TIM16_BKIN, TIM3_CH1, HRTIM_EEV6, SPI1_MISO/I2S1_SDI, SPI3_MISO/I2S3_SDI, SPI2_NSS/I2S2_WS, SPI6_MISO, SDMMC2_D3, UART7_TX, EVENTOUT	-

Table 8. STM32H757xI pin/ball definition (continued)

Pin/ball name					Pin name (function after reset)	Pin type	I/O structure	Notes	Alternate functions	Additional functions
WLCSP156	UFBGA169	LQFP176	LQFP208	TFBGA240+25						
B8	A5	164	191	A5	PB5	I/O	FT	-	TIM17_BKIN, TIM3_CH2, HRTIM_EEV7, I2C1_SMBA, SPI1_MOSI/I2S1_SDO, I2C4_SMBA, SPI3_MOSI/I2S3_SDO, SPI6_MOSI, FDCAN2_RX, OTG_HS_ULPI_D7, ETH_PPS_OUT, FMC_SDCKE1, DCMI_D10, UART5_RX, EVENTOUT	-
A9	-	-	-	VDD	VDD	S	-	-	-	-
C7	E5	165	192	B5	PB6	I/O	FT_f	-	TIM16_CH1N, TIM4_CH1, HRTIM_EEV8, I2C1_SCL, CEC, I2C4_SCL, USART1_TX, LPUART1_TX, FDCAN2_TX, QUADSPI_BK1_NCS, DFSDM1_DATIN5, FMC_SDNE1, DCMI_D5, UART5_TX, EVENTOUT	-
C8	C5	166	193	C5	PB7	I/O	FT_fa	-	TIM17_CH1N, TIM4_CH2, HRTIM_EEV9, I2C1_SDA, I2C4_SDA, USART1_RX, LPUART1_RX, DFSDM1_CKIN5, FMC_NL, DCMI_VSYNC, EVENTOUT	PVD_IN
D7	B5	167	194	E8	BOOT0	I	B	-	-	VPP

Table 8. STM32H757xI pin/ball definition (continued)

Pin/ball name					Pin name (function after reset)	Pin type	I/O structure	Notes	Alternate functions	Additional functions
WLCSP156	UFBGA169	LQFP176	LQFP208	TFBGA240+25						
A10	D5	168	195	D5	PB8	I/O	FT_fh	-	TIM16_CH1, TIM4_CH3, DFSDM1_CKIN7, I2C1_SCL, I2C4_SCL, SDMMC1_CKIN, UART4_RX, FDCAN1_RX, SDMMC2_D4, ETH_MII_TXD3, SDMMC1_D4, DCMI_D6, LCD_B6, EVENTOUT	-
C9	D6	169	196	D4	PB9	I/O	FT_fh	-	TIM17_CH1, TIM4_CH4, DFSDM1_DATIN7, I2C1_SDA, SPI2_NSS/I2S2_WS, I2C4_SDA, SDMMC1_CDIR, UART4_TX, FDCAN1_TX, SDMMC2_D5, I2C4_SMBA, SDMMC1_D5, DCMI_D7, LCD_B7, EVENTOUT	-
B10	D4	170	197	C4	PE0	I/O	FT_h	-	LPTIM1_ETR, TIM4_ETR, HRTIM_SCIN, LPTIM2_ETR, UART8_RX, SAI2_MCLK_A, FMC_NBL0, DCMI_D2, EVENTOUT	-
D8	C4	171	198	B4	PE1	I/O	FT_h	-	LPTIM1_IN2, HRTIM_SCOUT, UART8_TX, FMC_NBL1, DCMI_D3, EVENTOUT	-
A11	A4	172	199	A7	VCAP	S	-	-	-	-
C10	-	173	200	B6	VSS	S	-	-	-	-
E7	B3	174	201	E7	PDR_ON	I	FT	-	-	-
A12	A3	175	202	A6	VDDLDO	S	-	-	-	-

Table 8. STM32H757xI pin/ball definition (continued)

Pin/ball name					Pin name (function after reset)	Pin type	I/O structure	Notes	Alternate functions	Additional functions
WLCSP156	UFBGA169	LQFP176	LQFP208	TFBGA240+25						
B11	-	-	-	VDD	VDD	S	-	-	-	-
-	-	-	203	A4	PI4	I/O	FT_h	-	TIM8_BKIN, SAI2_MCLK_A, TIM8_BKIN_COMP12, FMC_NBL2, DCMI_D5, LCD_B4, EVENTOUT	-
-	-	-	204	A3	PI5	I/O	FT_h	-	TIM8_CH1, SAI2_SCK_A, FMC_NBL3, DCMI_VSYNC, LCD_B5, EVENTOUT	-
-	-	-	205	A2	PI6	I/O	FT_h	-	TIM8_CH2, SAI2_SD_A, FMC_D28, DCMI_D6, LCD_B6, EVENTOUT	-
-	-	-	206	B3	PI7	I/O	FT_h	-	TIM8_CH3, SAI2_FS_A, FMC_D29, DCMI_D7, LCD_B7, EVENTOUT	-
-	-	-	207	-	VSS	S	-	-	-	-
B11	-	176	208	VDD	VDD	S	-	-	-	-
M13	-	-	-	-	VSS	S	-	-	-	-
A13	-	-	-	-	DNC	-	-	-	-	-
-	H11	-	-	M15	VSSDSI	S	-	-	-	-
-	J11	-	-	J16	VSSDSI	S	-	-	-	-
-	K11	-	-	J17	VSSDSI	S	-	-	-	-

1. When this pin/ball was previously configured as an oscillator, the oscillator function is kept during and after a reset. This is valid for all resets except for power-on reset.
2. Pxy_C and Pxy pins/balls are two separate pads (analog switch open). The analog switch is configured through a SYSCFG register. Refer to the product reference manual for a detailed description of the switch configuration bits.
3. There is a direct path between Pxy_C and Pxy pins/balls, through an analog switch. Pxy alternate functions are available on Pxy_C when the analog switch is closed. The analog switch is configured through a SYSCFG register. Refer to the product reference manual for a detailed description of the switch configuration bits.
4. When the pin is used in USB configuration (OTG_HS_ID/OTG_HS_VBUS), the I/O is supplied by $V_{DD33USB}$, otherwise it is supplied by V_{DD}.
5. When it is not available on a package, the VDD50USB pin is internally tied to VDD33USB.

Table 9. Port A alternate functions

Port		AF0	AF1	AF2	AF3	AF4	AF5	AF6	AF7	AF8	AF9	AF10	AF11	AF12	AF13	AF14	AF15
		SYS	TIM1/2/16/17/LPTIM1/HRTIM1	SAI1/TIM3/4/5/HRTIM1	LPUART/TIM8/LPTIM2/3/4/5/HRTIM1/DFSDM1	I2C1/2/3/4/USART1/TIM15/LPTIM2/DFSDM1/CEC	SPI1/2/3/4/5/6/CEC	SPI2/3/SAI1/3/I2C4/UART4/DFSDM1	SPI2/3/6/USART1/2/3/6/UART7/SDMMC1	SPI6/SAI2/4/UART4/5/8/LPUART/SDMMC1/SPDIFRX1	SAI4/FDCAN1/FDACN2/TIM13/14/QUADSPI/FMC/SDMMC2/LCD/SPDIFRX1	SAI2/4/TIM8/QUADSPI/SDMMC2/OTG1_HS/OTG2_FS/LCD	I2C4/UART7/SWPMI1/TIM1/8/DFSDM1/SDMMC2/MDIOS/ETH	TIM1/8/FMC/SDMMC1/MDIOS/OTG1_FS/LCD	TIM1/DCMI/LCD/DSI/COMP	UART5/LCD	SYS
Port A	PA0	-	TIM2_CH1/TIM2_ETR	TIM5_CH1	TIM8_ETR	TIM15_BKIN	-	-	USART2_CTS/USART2_NSS	UART4_TX	SDMMC2_CMD	SAI2_SD_B	ETH_MII_CRS	-	-	-	EVENT OUT
	PA1	-	TIM2_CH2	TIM5_CH2	LPTIM3_OUT	TIM15_CH1N	-	-	USART2_RTS/USART2_DE	UART4_RX	QUADSPI_BK1_IO3	SAI2_MCLK_B	ETH_MII_RX_CLK/ETH_RMII_REF_CLK	-	-	LCD_R2	EVENT OUT
	PA2	-	TIM2_CH3	TIM5_CH3	LPTIM4_OUT	TIM15_CH1	-	-	USART2_TX	SAI2_SCK_B	-	-	ETH_MDIO	MDIOS_MDIO	-	LCD_R1	EVENT OUT
	PA3	-	TIM2_CH4	TIM5_CH4	LPTIM5_OUT	TIM15_CH2	-	-	USART2_RX	-	LCD_B2	OTG_HS_ULPI_D0	ETH_MII_COL	-	-	LCD_B5	EVENT OUT
	PA4	D1PWRE	-	TIM5_ETR	-	-	SPI1_NSS/I2S1_WS	SPI3_NSS/I2S3_WS	USART2_CK	SPI6_NSS	-	-	-	OTG_HS_SOF	DCMI_HSYNC	LCD_VSYNC	EVENT OUT
	PA5	D2PWRE	TIM2_CH1/TIM2_ETR	-	TIM8_CH1N	-	SPI1_SCK/I2S1_CK	-	-	SPI6_SCK	-	OTG_HS_ULPI_CK	-	-	-	LCD_R4	EVENT OUT
	PA6	-	TIM1_BKIN	TIM3_CH1	TIM8_BKIN	-	SPI1_MISO/I2S1_SDI	-	-	SPI6_MISO	TIM13_CH1	TIM8_BKIN_COMP12	MDIOS_MDC	TIM1_BKIN_COMP12	DCMI_PIXCLK	LCD_G2	EVENT OUT
	PA7	-	TIM1_CH1N	TIM3_CH2	TIM8_CH1N	-	SPI1_MOSI/I2S1_SDO	-	-	SPI6_MOSI	TIM14_CH1	-	ETH_MII_RX_DV/ETH_RMII_CRS_DV	FMC_SDNWE	-	-	EVENT OUT
	PA8	MCO1	TIM1_CH1	HRTIM_CHB2	TIM8_BKIN2	I2C3_SCL	-	-	USART1_CK	-	-	OTG_FS_SOF	UART7_RX	TIM8_BKIN2_COMP12	LCD_B3	LCD_R6	EVENT OUT
	PA9	-	TIM1_CH2	HRTIM_CHC1	LPUART1_TX	I2C3_SMBA	SPI2_SCK/I2S2_CK	-	USART1_TX	-	-	-	ETH_TX_ER	-	DCMI_D0	LCD_R5	EVENT OUT
	PA10	-	TIM1_CH3	HRTIM_CHC2	LPUART1_RX	-	-	-	USART1_RX	-	-	OTG_FS_ID	MDIOS_MDIO	LCD_B4	DCMI_D1	LCD_B1	EVENT OUT
	PA11	-	TIM1_CH4	HRTIM_CHD1	LPUART1_CTS	-	SPI2_NSS/I2S2_WS	UART4_RX	USART1_CTS/USART1_NSS	-	FDCAN1_RX	OTG_FS_DM	-	-	-	LCD_R4	EVENT OUT
	PA12	-	TIM1_ETR	HRTIM_CHD2	LPUART1_RTS/LPUART1_DE	-	SPI2_SCK/I2S2_CK	UART4_TX	USART1_RTS/USART1_DE	SAI2_FS_B	FDCAN1_TX	OTG_FS_DP	-	-	-	LCD_R5	EVENT OUT

Table 9. Port A alternate functions (continued)

Port		AF0	AF1	AF2	AF3	AF4	AF5	AF6	AF7	AF8	AF9	AF10	AF11	AF12	AF13	AF14	AF15
		SYS	TIM1/2/16/17/LPTIM1/HRTIM1	SAI1/TIM3/4/5/HRTIM1	LPUART/TIM8/LPTIM2/3/4/5/HRTIM1/DFSDM1	I2C1/2/3/4/USART1/TIM15/LPTIM2/DFSDM1/CEC	SPI1/2/3/4/5/6/CEC	SPI2/3/SAI1/3/I2C4/UART4/DFSDM1	SPI2/3/6/USART1/2/3/6/UART7/SDMMC1	SPI6/SAI2/4/UART4/5/8/LPUART/SDMMC1/SPDIFRX1	SAI4/FDCAN1/FDACN2/TIM13/14/QUADSPI/FMC/SDMMC2/LCD/SPDIFRX1	SAI2/4/TIM8/QUADSPI/SDMMC2/OTG1_HS/OTG2_FS/LCD	I2C4/UART7/SWPMI1/TIM1/8/DFSDM1/SDMMC2/MDIOS/ETH	TIM1/8/FMC/SDMMC1/MDIOS/OTG1_FS/LCD	TIM1/DCMI/LCD/DSI/COMP	UART5/LCD	SYS
Port A	PA13	JTMS/SWDIO	-	-	-	-	-	-	-	-	-	-	-	-	-	-	EVENTOUT
Port A	PA14	JTCK/SWCLK	-	-	-	-	-	-	-	-	-	-	-	-	-	-	EVENTOUT
Port A	PA15	JTDI	TIM2_CH1/TIM2_ETR	HRTIM_FLT1	-	CEC	SPI1_NSS/I2S1_WS	SPI3_NSS/I2S3_WS	SPI6_NSS	UART4_RTS/UART4_DE	-	-	UART7_TX	-	DSI_TE	-	EVENTOUT

Table 10. Port B alternate functions

Port		AF0	AF1	AF2	AF3	AF4	AF5	AF6	AF7	AF8	AF9	AF10	AF11	AF12	AF13	AF14	AF15
		SYS	TIM1/2/16/17/LPTIM1/HRTIM1	SAI1/TIM3/4/5/12/HRTIM1	LPUART/TIM8/LPTIM2/3/4/5/HRTIM1/DFSDM1	I2C1/2/3/4/USART1/TIM15/LPTIM2/DFSDM1/CEC	SPI1/2/3/4/5/6/CEC	SPI2/3/SAI1/3/I2C4/UART4/DFSDM1	SPI2/3/6/USART1/2/3/6/UART7/SDMMC1	SPI6/SAI2/4/UART4/5/8/LPUART/SDMMC1/SPDIFRX1	SAI4/FDCAN1/FDACN2/TIM13/14/QUADSPI/FMC/SDMMC2/LCD/SPDIFRX1	SAI2/4/TIM8/QUADSPI/SDMMC2/OTG1_HS/OTG2_FS/LCD/CRS	I2C4/UART7/SWPMI1/TIM1/8/DFSDM1/SDMMC2/MDIOS/ETH	TIM1/8/FMC/SDMMC1/MDIOS/OTG1_FS/LCD	TIM1/DCMI/LCD/DSI/COMP	UART5/LCD	SYS
Port B	PB0	-	TIM1_CH2N	TIM3_CH3	TIM8_CH2N	-	-	DFSDM1_CKOUT	-	UART4_CTS	LCD_R3	OTG_HS_ULPI_D1	ETH_MII_RXD2	-	-	LCD_G1	EVENTOUT
Port B	PB1	-	TIM1_CH3N	TIM3_CH4	TIM8_CH3N	-	-	DFSDM1_DATIN1	-	-	LCD_R6	OTG_HS_ULPI_D2	ETH_MII_RXD3	-	-	LCD_G0	EVENTOUT
Port B	PB2	RTC_OUT	-	SAI1_D1	-	DFSDM1_CKIN1	-	SAI1_SD_A	SPI3_MOSI/I2S3_SDO	SAI4_SD_A	QUADSPI_CLK	SAI4_D1	-	-	-	-	EVENTOUT
Port B	PB3	JTDO/TRACESWO	TIM2_CH2	HRTIM_FLT4	-	-	SPI1_SCK/I2S1_CK	SPI3_SCK/I2S3_CK	-	SPI6_SCK	SDMMC2_D2	CRS_SYNC	UART7_RX	-	-	-	EVENTOUT
Port B	PB4	NJTRST	TIM16_BKIN	TIM3_CH1	HRTIM_EEV6	-	SPI1_MISO/I2S1_SDI	SPI3_MISO/I2S3_SDI	SPI2_NSS/I2S2_WS	SPI6_MISO	SDMMC2_D3	-	UART7_TX	-	-	-	EVENTOUT
Port B	PB5	-	TIM17_BKIN	TIM3_CH2	HRTIM_EEV7	I2C1_SMBA	SPI1_MOSI/I2S1_SDO	I2C4_SMBA	SPI3_MOSI/I2S3_SDO	SPI6_MOSI	FDCAN2_RX	OTG_HS_ULPI_D7	ETH_PPS_OUT	FMC_SDCKE1	DCMI_D10	UART5_RX	EVENTOUT
Port B	PB6	-	TIM16_CH1N	TIM4_CH1	HRTIM_EEV8	I2C1_SCL	CEC	I2C4_SCL	USART1_TX	LPUART1_TX	FDCAN2_TX	QUADSPI_BK1_NCS	DFSDM1_DATIN5	FMC_SDNE1	DCMI_D5	UART5_TX	EVENTOUT
Port B	PB7	-	TIM17_CH1N	TIM4_CH2	HRTIM_EEV9	I2C1_SDA	-	I2C4_SDA	USART1_RX	LPUART1_RX	-	-	DFSDM1_CKIN5	FMC_NL	DCMI_VSYNC	-	EVENTOUT
Port B	PB8	-	TIM16_CH1	TIM4_CH3	DFSDM1_CKIN7	I2C1_SCL	-	I2C4_SCL	SDMMC1_CKIN	UART4_RX	FDCAN1_RX	SDMMC2_D4	ETH_MII_TXD3	SDMMC1_D4	DCMI_D6	LCD_B6	EVENTOUT

Table 10. Port B alternate functions (continued)

Port		AF0	AF1	AF2	AF3	AF4	AF5	AF6	AF7	AF8	AF9	AF10	AF11	AF12	AF13	AF14	AF15
		SYS	TIM1/2/16/17/LPTIM1/HRTIM1	SAI1/TIM3/4/5/12/HRTIM1	LPUART/TIM8/LPTIM2/3/4/5/HRTIM1/DFSDM1	I2C1/2/3/4/USART1/TIM15/LPTIM2/DFSDM1/CEC	SPI1/2/3/4/5/6/CEC	SPI2/3/SAI1/3/I2C4/UART4/DFSDM1	SPI2/3/6/USART1/2/3/6/UART7/SDMMC1	SPI6/SAI2/4/UART4/5/8/LPUART/SDMMC1/SPDIFRX1	SAI4/FDCAN1/FDACN2/TIM13/14/QUADSPI/FMC/SDMMC2/LCD/SPDIFRX1	SAI2/4/TIM8/QUADSPI/SDMMC2/OTG1_HS/OTG2_FS/LCD/CRS	I2C4/UART7/SWPMI1/TIM1/8/DFSDM1/SDMMC2/MDIOS/ETH	TIM1/8/FMC/SDMMC1/MDIOS/OTG1_FS/LCD	TIM1/DCMI/LCD/DSI/COMP	UART5/LCD	SYS
Port B	PB9	-	TIM17_CH1	TIM4_CH4	DFSDM1_DATIN7	I2C1_SDA	SPI2_NSS/I2S2_WS	I2C4_SDA	SDMMC1_CDIR	UART4_TX	FDCAN1_TX	SDMMC2_D5	I2C4_SMBA	SDMMC1_D5	DCMI_D7	LCD_B7	EVENT OUT
	PB10	-	TIM2_CH3	HRTIM_SCOUT	LPTIM2_IN1	I2C2_SCL	SPI2_SCK/I2S2_CK	DFSDM1_DATIN7	USART3_TX	-	QUADSPI_BK1_NCS	OTG_HS_ULPI_D3	ETH_MII_RX_ER	-	-	LCD_G4	EVENT OUT
	PB11	-	TIM2_CH4	HRTIM_SCIN	LPTIM2_ETR	I2C2_SDA	-	DFSDM1_CKIN7	USART3_RX	-	-	OTG_HS_ULPI_D4	ETH_MII_TX_EN/ETH_RMII_TX_EN	-	DSI_TE	LCD_G5	EVENT OUT
	PB12	-	TIM1_BKIN	-	-	I2C2_SMBA	SPI2_NSS/I2S2_WS	DFSDM1_DATIN1	USART3_CK	-	FDCAN2_RX	OTG_HS_ULPI_D5	ETH_MII_TXD0/ETH_RMII_TXD0	OTG_HS_ID	TIM1_BKIN_COMP12	UART5_RX	EVENT OUT
	PB13	-	TIM1_CH1N	-	LPTIM2_OUT	-	SPI2_SCK/I2S2_CK	DFSDM1_CKIN1	USART3_CTS/USART3_NSS	-	FDCAN2_TX	OTG_HS_ULPI_D6	ETH_MII_TXD1/ETH_RMII_TXD1	-	-	UART5_TX	EVENT OUT
	PB14	-	TIM1_CH2N	TIM12_CH1	TIM8_CH2N	USART1_TX	SPI2_MISO/I2S2_SDI	DFSDM1_DATIN2	USART3_RTS/USART3_DE	UART4_RTS/UART4_DE	SDMMC2_D0	-	-	OTG_HS_DM	-	-	EVENT OUT
	PB15	RTC_REFIN	TIM1_CH3N	TIM12_CH2	TIM8_CH3N	USART1_RX	SPI2_MOSI/I2S2_SDO	DFSDM1_CKIN2	-	UART4_CTS	SDMMC2_D1	-	-	OTG_HS_DP	-	-	EVENT OUT

Table 11. Port C alternate functions

Port		AF0	AF1	AF2	AF3	AF4	AF5	AF6	AF7	AF8	AF9	AF10	AF11	AF12	AF13	AF14	AF15
		SYS	TIM1/2/16/17/LPTIM1/HRTIM1	SAI1/TIM3/4/5/HRTIM1	LPUART/TIM8/LPTIM2/3/4/5/HRTIM1/DFSDM1	I2C1/2/3/4/USART1/TIM15/LPTIM2/DFSDM1/CEC	SPI1/2/3/4/5/6/CEC	SPI2/3/SAI1/3/I2C4/UART4/DFSDM1	SPI2/3/6/USART1/2/3/6/UART7/SDMMC1	SPI6/SAI2/4/UART4/5/8/LPUART/SDMMC1/SPDIFRX1	SAI4/FDCAN1/FDACN2/TIM13/14/QUADSPI/FMC/SDMMC2/LCD/SPDIFRX1	SAI2/4/TIM8/QUADSPI/SDMMC2/OTG1_HS/OTG2_FS/LCD	I2C4/UART7/SWPMI1/TIM1/8/DFSDM1/SDMMC2/MDIOS/ETH	TIM1/8/FMC/SDMMC1/MDIOS/OTG1_FS/LCD	TIM1/DCMI/LCD/DSI/COMP	UART5/LCD	SYS
Port C	PC0	-	-	-	DFSDM1_CKIN0	-	-	DFSDM1_DATIN4	-	SAI2_FS_B	-	OTG_HS_ULPI_STP	-	FMC_SDNWE	-	LCD_R5	EVENTOUT
	PC1	TRACED0	-	SAI1_D1	DFSDM1_DATIN0	DFSDM1_CKIN4	SPI2_MOSI/I2S2_SDO	SAI1_SD_A	-	SAI4_SD_A	SDMMC2_CK	SAI4_D1	ETH_MDC	MDIOS_MDC	-	-	EVENTOUT
	PC2	C1DSLEEP	-	-	DFSDM1_CKIN1	-	SPI2_MISO/I2S2_SDI	DFSDM1_CKOUT	-	-	-	OTG_HS_ULPI_DIR	ETH_MII_TXD2	FMC_SDNE0	-	-	EVENTOUT
	PC3	C1SLEEP	-	-	DFSDM1_DATIN1	-	SPI2_MOSI/I2S2_SDO	-	-	-	-	OTG_HS_ULPI_NXT	ETH_MII_TX_CLK	FMC_SDCKE0	-	-	EVENTOUT
	PC4	C2DSLEEP	-	-	DFSDM1_CKIN2	-	I2S1_MCK	-	-	-	SPDIFRX1_IN3	-	ETH_MII_RXD0/ETH_RMII_RXD0	FMC_SDNE0	-	-	EVENTOUT
	PC5	C2SLEEP	-	SAI1_D3	DFSDM1_DATIN2	-	-	-	-	-	SPDIFRX1_IN4	SAI4_D3	ETH_MII_RXD1/ETH_RMII_RXD1	FMC_SDCKE0	COMP1_OUT	-	EVENTOUT
	PC6	-	HRTIM_CHA1	TIM3_CH1	TIM8_CH1	DFSDM1_CKIN3	I2S2_MCK	-	USART6_TX	SDMMC1_D0DIR	FMC_NWAIT	SDMMC2_D6	-	SDMMC1_D6	DCMI_D0	LCD_HSYNC	EVENTOUT
	PC7	TRGIO	HRTIM_CHA2	TIM3_CH2	TIM8_CH2	DFSDM1_DATIN3	-	I2S3_MCK	USART6_RX	SDMMC1_D123DIR	FMC_NE1	SDMMC2_D7	SWPMI_TX	SDMMC1_D7	DCMI_D1	LCD_G6	EVENTOUT
	PC8	TRACED1	HRTIM_CHB1	TIM3_CH3	TIM8_CH3	-	-	-	USART6_CK	UART5_RTS/UART5_DE	FMC_NE2/FMC_NCE	-	SWPMI_RX	SDMMC1_D0	DCMI_D2	-	EVENTOUT
	PC9	MCO2	-	TIM3_CH4	TIM8_CH4	I2C3_SDA	I2S_CKIN	-	-	UART5_CTS	QUADSPI_BK1_IO0	LCD_G3	SWPMI_SUSPEND	SDMMC1_D1	DCMI_D3	LCD_B2	EVENTOUT
	PC10	-	-	HRTIM_EEV1	DFSDM1_CKIN5	-	-	SPI3_SCK/I2S3_CK	USART3_TX	UART4_TX	QUADSPI_BK1_IO1	-	-	SDMMC1_D2	DCMI_D8	LCD_R2	EVENTOUT
	PC11	-	-	HRTIM_FLT2	DFSDM1_DATIN5	-	-	SPI3_MISO/I2S3_SDI	USART3_RX	UART4_RX	QUADSPI_BK2_NCS	-	-	SDMMC1_D3	DCMI_D4	-	EVENTOUT
	PC12	TRACED3	-	HRTIM_EEV2	-	-	-	SPI3_MOSI/I2S3_SDO	USART3_CK	UART5_TX	-	-	-	SDMMC1_CK	DCMI_D9	-	EVENTOUT
	PC13	-	-	-	-	-	-	-	-	-	-	-	-	-	-	-	EVENTOUT
	PC14	-	-	-	-	-	-	-	-	-	-	-	-	-	-	-	EVENTOUT
	PC15	-	-	-	-	-	-	-	-	-	-	-	-	-	-	-	EVENTOUT

Table 12. Port D alternate functions

Port		AF0	AF1	AF2	AF3	AF4	AF5	AF6	AF7	AF8	AF9	AF10	AF11	AF12	AF13	AF14	AF15
		SYS	TIM1/2/16/17/LPTIM1/HRTIM1	SAI1/TIM3/4/5/HRTIM1	LPUART/TIM8/LPTIM2/3/4/5/HRTIM1/DFSDM1	I2C1/2/3/4/USART1/TIM15/LPTIM2/DFSDM1/CEC	SPI1/2/3/4/5/6/CEC	SPI2/3/SAI1/3/I2C4/UART4/DFSDM1	SPI2/3/6/USART1/2/3/6/UART7/SDMMC1	SPI6/SAI2/4/UART4/5/8/LPUART/SDMMC1/SPDIFRX1	SAI4/FDCAN1/FDACN2/TIM13/14/QUADSPI/FMC/SDMMC2/LCD/SPDIFRX1	SAI2/4/TIM8/QUADSPI/SDMMC2/OTG1_HS/OTG2_FS/LCD	I2C4/UART7/SWPMI1/TIM1/8/DFSDM1/SDMMC2/MDIOS/ETH	TIM1/8/FMC/SDMMC1/MDIOS/OTG1_FS/LCD	TIM1/DCMI/LCD/DSI/COMP	UART5/LCD	SYS
Port D	PD0	-	-	-	DFSDM1_CKIN6	-	-	SAI3_SCK_A	-	UART4_RX	FDCAN1_RX	-	-	FMC_D2/FMC_DA2	-	-	EVENTOUT
	PD1	-	-	-	DFSDM1_DATIN6	-	-	SAI3_SD_A	-	UART4_TX	FDCAN1_TX	-	-	FMC_D3/FMC_DA3	-	-	EVENTOUT
	PD2	TRACED2	-	TIM3_ETR	-	-	-	-	-	UART5_RX	-	-	-	SDMMC1_CMD	DCMI_D11	-	EVENTOUT
	PD3	-	-	-	DFSDM1_CKOUT	-	SPI2_SCK/I2S2_CK	-	USART2_CTS/USART2_NSS	-	-	-	-	FMC_CLK	DCMI_D5	LCD_G7	EVENTOUT
	PD4	-	-	HRTIM_FLT3	-	-	-	SAI3_FS_A	USART2_RTS/USART2_DE	-	-	-	-	FMC_NOE	-	-	EVENTOUT
	PD5	-	-	HRTIM_EEV3	-	-	-		USART2_TX	-	-	-	-	FMC_NWE	-	-	EVENTOUT
	PD6	-	-	SAI1_D1	DFSDM1_CKIN4	DFSDM1_DATIN1	SPI3_MOSI/I2S3_SDO	SAI1_SD_A	USART2_RX	SAI4_SD_A	-	SAI4_D1	SDMMC2_CK	FMC_NWAIT	DCMI_D10	LCD_B2	EVENTOUT
	PD7	-	-	-	DFSDM1_DATIN4	-	SPI1_MOSI/I2S1_SDO	DFSDM1_CKIN1	USART2_CK	-	SPDIFRX1_IN1	-	SDMMC2_CMD	FMC_NE1	-	-	EVENTOUT
	PD8	-	-	-	DFSDM1_CKIN3	-	-	SAI3_SCK_B	USART3_TX	-	SPDIFRX1_IN2	-	-	FMC_D13/FMC_DA13	-	-	EVENTOUT
	PD9	-	-	-	DFSDM1_DATIN3	-	-	SAI3_SD_B	USART3_RX	-	-	-	-	FMC_D14/FMC_DA14	-	-	EVENTOUT
	PD10	-	-	-	DFSDM1_CKOUT	-	-	SAI3_FS_B	USART3_CK	-	-	-	-	FMC_D15/FMC_DA15	-	LCD_B3	EVENTOUT
	PD11	-	-	-	LPTIM2_IN2	I2C4_SMBA	-	-	USART3_CTS/USART3_NSS	-	QUADSPI_BK1_IO0	SAI2_SD_A	-	FMC_A16	-	-	EVENTOUT
	PD12	-	LPTIM1_IN1	TIM4_CH1	LPTIM2_IN1	I2C4_SCL	-	-	USART3_RTS/USART3_DE	-	QUADSPI_BK1_IO1	SAI2_FS_A	-	FMC_A17	-	-	EVENTOUT
	PD13	-	LPTIM1_OUT	TIM4_CH2	-	I2C4_SDA	-	-			QUADSPI_BK1_IO3	SAI2_SCK_A	-	FMC_A18	-	-	EVENTOUT
Port D	PD14	-		TIM4_CH3	-	-	-	SAI3_MCLK_B	-	UART8_CTS	-	-	-	FMC_D0/FMC_DA0	-	-	EVENTOUT
	PD15	-		TIM4_CH4	-	-	-	SAI3_MCLK_A	-	UART8_RTS/UART8_DE	-	-	-	FMC_D1/FMC_DA1	-	-	EVENTOUT

Table 13. Port E alternate functions

Port		AF0	AF1	AF2	AF3	AF4	AF5	AF6	AF7	AF8	AF9	AF10	AF11	AF12	AF13	AF14	AF15
		SYS	TIM1/2/16/17/LPTIM1/HRTIM1	SAI1/TIM3/4/5/HRTIM1	LPUART/TIM8/LPTIM2/3/4/5/HRTIM1/DFSDM1	I2C1/2/3/4/USART1/TIM15/LPTIM2/DFSDM1/CEC	SPI1/2/3/4/5/6/CEC	SPI2/3/SAI1/3/I2C4/UART4/DFSDM1	SPI2/3/6/USART1/2/3/6/UART7/SDMMC1	SPI6/SAI2/4/UART4/5/8/LPUART/SDMMC1/SPDIFRX1	SAI4/FDCAN1/FDACN2/TIM13/14/QUADSPI/FMC/SDMMC2/LCD/SPDIFRX1	SAI2/4/TIM8/QUADSPI/SDMMC2/OTG1_HS/OTG2_FS/LCD	I2C4/UART7/SWPMI1/TIM1/8/DFSDM1/SDMMC2/MDIOS/ETH	TIM1/8/FMC/SDMMC1/MDIOS/OTG1_FS/LCD	TIM1/DCMI/LCD/DSI/COMP	UART5/LCD	SYS
Port E	PE0	-	LPTIM1_ETR	TIM4_ETR	HRTIM_SCIN	LPTIM2_ETR	-	-	-	UART8_RX	-	SAI2_MCLK_A	-	FMC_NBL0	DCMI_D2	-	EVENT OUT
	PE1	-	LPTIM1_IN2	-	HRTIM_SCOUT	-	-	-	-	UART8_TX	-	-	-	FMC_NBL1	DCMI_D3	-	EVENT OUT
	PE2	TRACECLK	-	SAI1_CK1	-	-	SPI4_SCK	SAI1_MCLK_A	-	SAI4_MCLK_A	QUADSPI_BK1_IO2	SAI4_CK1	ETH_MII_TXD3	FMC_A23	-	-	EVENT OUT
	PE3	TRACED0	-	-	-	TIM15_BKIN	-	SAI1_SD_B	-	SAI4_SD_B	-	-	-	FMC_A19	-	-	EVENT OUT
	PE4	TRACED1	-	SAI1_D2	DFSDM1_DATIN3	TIM15_CH1N	SPI4_NSS	SAI1_FS_A	-	SAI4_FS_A	-	SAI4_D2	-	FMC_A20	DCMI_D4	LCD_B0	EVENT OUT
	PE5	TRACED2	-	SAI1_CK2	DFSDM1_CKIN3	TIM15_CH1	SPI4_MISO	SAI1_SCK_A	-	SAI4_SCK_A	-	SAI4_CK2	-	FMC_A21	DCMI_D6	LCD_G0	EVENT OUT
	PE6	TRACED3	TIM1_BKIN2	SAI1_D1	-	TIM15_CH2	SPI4_MOSI	SAI1_SD_A	-	SAI4_SD_A	SAI4_D1	SAI2_MCLK_B	TIM1_BKIN2_COMP12	FMC_A22	DCMI_D7	LCD_G1	EVENT OUT
	PE7	-	TIM1_ETR	-	DFSDM1_DATIN2	-	-	-	UART7_RX	-	-	QUADSPI_BK2_IO0	-	FMC_D4/FMC_DA4	-	-	EVENT OUT
	PE8	-	TIM1_CH1N	-	DFSDM1_CKIN2	-	-	-	UART7_TX	-	-	QUADSPI_BK2_IO1	-	FMC_D5/FMC_DA5	COMP2_OUT	-	EVENT OUT
	PE9	-	TIM1_CH1	-	DFSDM1_CKOUT	-	-	-	UART7_RTS/UART7_DE	-	-	QUADSPI_BK2_IO2	-	FMC_D6/FMC_DA6	-	-	EVENT OUT
	PE10	-	TIM1_CH2N	-	DFSDM1_DATIN4	-	-	-	UART7_CTS	-	-	QUADSPI_BK2_IO3	-	FMC_D7/FMC_DA7	-	-	EVENT OUT
	PE11	-	TIM1_CH2	-	DFSDM1_CKIN4	-	SPI4_NSS	-	-	-	-	SAI2_SD_B	-	FMC_D8/FMC_DA8	-	LCD_G3	EVENT OUT
	PE12	-	TIM1_CH3N	-	DFSDM1_DATIN5	-	SPI4_SCK	-	-	-	-	SAI2_SCK_B	-	FMC_D9/FMC_DA9	COMP1_OUT	LCD_B4	EVENT OUT
	PE13	-	TIM1_CH3	-	DFSDM1_CKIN5	-	SPI4_MISO	-	-	-	-	SAI2_FS_B	-	FMC_D10/FMC_DA10	COMP2_OUT	LCD_DE	EVENT OUT
	PE14	-	TIM1_CH4	-	-	-	SPI4_MOSI	-	-	-	-	SAI2_MCLK_B	-	FMC_D11/FMC_DA11	-	LCD_CLK	EVENT OUT
	PE15	-	TIM1_BKIN	-	-	-	TIM1_BKIN	-	-	-	-	-	-	FMC_D12/FMC_DA12	TIM1_BKIN_COMP12/COMP_TIM1_BKIN	LCD_R7	EVENT OUT

Table 14. Port F alternate functions

Port		AF0	AF1	AF2	AF3	AF4	AF5	AF6	AF7	AF8	AF9	AF10	AF11	AF12	AF13	AF14	AF15
		SYS	TIM1/2/16/17/LPTIM1/HRTIM1	SAI1/TIM3/4/5/HRTIM1	LPUART/TIM8/LPTIM2/3/4/5/HRTIM1/DFSDM1	I2C1/2/3/4/USART1/TIM15/LPTIM2/DFSDM1/CEC	SPI1/2/3/4/5/6/CEC	SPI2/3/SAI1/3/I2C4/UART4/DFSDM1	SPI2/3/6/USART1/2/3/6/UART7/SDMMC1	SPI6/SAI2/4/UART4/5/8/LPUART/SDMMC1/SPDIFRX1	SAI4/FDCAN1/FDACN2/TIM13/14/QUADSPI/FMC/SDMMC2/LCD/SPDIFRX1	SAI2/4/TIM8/QUADSPI/SDMMC2/OTG1_HS/OTG2_FS/LCD	I2C4/UART7/SWPMI1/TIM1/8/DFSDM1/SDMMC2/MDIOS/ETH	TIM1/8/FMC/SDMMC1/MDIOS/OTG1_FS/LCD	TIM1/DCMI/LCD/DSI/COMP	UART5/LCD	SYS
Port F	PF0	-	-	-	-	I2C2_SDA	-	-	-	-	-	-	-	FMC_A0	-	-	EVENT OUT
	PF1	-	-	-	-	I2C2_SCL	-	-	-	-	-	-	-	FMC_A1	-	-	EVENT OUT
	PF2	-	-	-	-	I2C2_SMBA	-	-	-	-	-	-	-	FMC_A2	-	-	EVENT OUT
	PF3	-	-	-	-	-	-	-	-	-	-	-	-	FMC_A3	-	-	EVENT OUT
	PF4	-	-	-	-	-	-	-	-	-	-	-	-	FMC_A4	-	-	EVENT OUT
	PF5	-	-	-	-	-	-	-	-	-	-	-	-	FMC_A5	-	-	EVENT OUT
	PF6	-	TIM16_CH1	-	-	-	SPI5_NSS	SAI1_SD_B	UART7_RX	SAI4_SD_B	QUADSPI_BK1_IO3	-	-	-	-	-	EVENT OUT
	PF7	-	TIM17_CH1	-	-	-	SPI5_SCK	SAI1_MCLK_B	UART7_TX	SAI4_MCLK_B	QUADSPI_BK1_IO2	-	-	-	-	-	EVENT OUT
	PF8	-	TIM16_CH1N	-	-	-	SPI5_MISO	SAI1_SCK_B	UART7_RTS/UART7_DE	SAI4_SCK_B	TIM13_CH1	QUADSPI_BK1_IO0	-	-	-	-	EVENT OUT
	PF9	-	TIM17_CH1N	-	-	-	SPI5_MOSI	SAI1_FS_B	UART7_CTS	SAI4_FS_B	TIM14_CH1	QUADSPI_BK1_IO1	-	-	-	-	EVENT OUT
	PF10	-	TIM16_BKIN	SAI1_D3	-	-	-	-	-	-	QUADSPI_CLK	SAI4_D3	-	-	DCMI_D11	LCD_DE	EVENT OUT
	PF11	-	-	-	-	-	SPI5_MOSI	-	-	-	-	SAI2_SD_B	-	FMC_SDNRAS	DCMI_D12	-	EVENT OUT
	PF12	-	-	-	-	-	-	-	-	-	-	-	-	FMC_A6	-	-	EVENT OUT
	PF13	-	-	-	DFSDM1_DATIN6	I2C4_SMBA	-	-	-	-	-	-	-	FMC_A7	-	-	EVENT OUT
	PF14	-	-	-	DFSDM1_CKIN6	I2C4_SCL	-	-	-	-	-	-	-	FMC_A8	-	-	EVENT OUT
	PF15	-	-	-	-	I2C4_SDA	-	-	-	-	-	-	-	FMC_A9	-	-	EVENT OUT

Table 15. Port G alternate functions

Port		AF0	AF1	AF2	AF3	AF4	AF5	AF6	AF7	AF8	AF9	AF10	AF11	AF12	AF13	AF14	AF15
		SYS	TIM1/2/16/17/LPTIM1/HRTIM1	SAI1/TIM3/4/5/HRTIM1	LPUART/TIM8/LPTIM2/3/4/5/HRTIM1/DFSDM1	I2C1/2/3/4/USART1/TIM15/LPTIM2/DFSDM1/CEC	SPI1/2/3/4/5/6/CEC	SPI2/3/SAI1/3/I2C4/UART4/DFSDM1	SPI2/3/6/USART1/2/3/6/UART7/SDMMC1	SPI6/SAI2/4/UART4/5/8/LPUART/SDMMC1/SPDIFRX1	SAI4/FDCAN1/FDACN2/TIM13/14/QUADSPI/FMC/SDMMC2/LCD/SPDIFRX1	SAI2/4/TIM8/QUADSPI/SDMMC2/OTG1_HS/OTG2_FS/LCD	I2C4/UART7/SWPMI1/TIM1/8/DFSDM1/SDMMC2/MDIOS/ETH	TIM1/8/FMC/SDMMC1/MDIOS/OTG1_FS/LCD	TIM1/DCMI/LCD/DSI/COMP	UART5/LCD	SYS
Port G	PG0	-	-	-	-	-	-	-	-	-	-	-	-	FMC_A10	-	-	EVENT OUT
	PG1	-	-	-	-	-	-	-	-	-	-	-	-	FMC_A11	-	-	EVENT OUT
	PG2	-	-	-	TIM8_BKIN	-	-	-	-	-	-	-	TIM8_BKIN_COMP12	FMC_A12	-	-	EVENT OUT
	PG3	-	-	-	TIM8_BKIN2	-	-	-	-	-	-	-	TIM8_BKIN2_COMP12	FMC_A13	-	-	EVENT OUT
	PG4	-	TIM1_BKIN2	-	-	-	-	-	-	-	-	-	TIM1_BKIN2_COMP12	FMC_A14/FMC_BA0	-	-	EVENT OUT
	PG5	-	TIM1_ETR	-	-	-	-	-	-	-	-	-	-	FMC_A15/FMC_BA1	-	-	EVENT OUT
	PG6	-	TIM17_BKIN	HRTIM_CHE1	-	-	-	-	-	-	-	QUADSPI_BK1_NCS	-	FMC_NE3	DCMI_D12	LCD_R7	EVENT OUT
	PG7	-	-	HRTIM_CHE2	-	-	-	SAI1_MCLK_A	USART6_CK	-	-	-	-	FMC_INT	DCMI_D13	LCD_CLK	EVENT OUT
	PG8	-	-	-	TIM8_ETR	-	SPI6_NSS	-	USART6_RTS/USART6_DE	SPDIFRX1_IN3	-	-	ETH_PPS_OUT	FMC_SDCLK	-	LCD_G7	EVENT OUT
	PG9	-	-	-	-	-	SPI1_MISO/I2S1_SDI	-	USART6_RX	SPDIFRX1_IN4	QUADSPI_BK2_IO2	SAI2_FS_B	-	FMC_NE2/FMC_NCE	DCMI_VSYNC	-	EVENT OUT
	PG10	-		HRTIM_FLT5	-	-	SPI1_NSS/I2S1_WS	-	-	-	LCD_G3	SAI2_SD_B	-	FMC_NE3	DCMI_D2	LCD_B2	EVENT OUT
	PG11	-	LPTIM1_IN2	HRTIM_EEV4	-	-	SPI1_SCK/I2S1_CK	-	-	SPDIFRX1_IN1	-	SDMMC2_D2	ETH_MII_TX_EN/ETH_RMII_TX_EN	-	DCMI_D3	LCD_B3	EVENT OUT
	PG12	-	LPTIM1_IN1	HRTIM_EEV5	-	-	SPI6_MISO	-	USART6_RTS/USART6_DE	SPDIFRX1_IN2	LCD_B4	-	ETH_MII_TXD1/ETH_RMII_TXD1	FMC_NE4	-	LCD_B1	EVENT OUT
	PG13	TRACED0	LPTIM1_OUT	HRTIM_EEV10	-	-	SPI6_SCK	-	USART6_CTS/USART6_NSS	-	-	-	ETH_MII_TXD0/ETH_RMII_TXD0	FMC_A24	-	LCD_R0	EVENT OUT

Table 15. Port G alternate functions (continued)

Port		AF0	AF1	AF2	AF3	AF4	AF5	AF6	AF7	AF8	AF9	AF10	AF11	AF12	AF13	AF14	AF15
		SYS	TIM1/2/16/17/LPTIM1/HRTIM1	SAI1/TIM3/4/5/HRTIM1	LPUART/TIM8/LPTIM2/3/4/5/HRTIM1/DFSDM1	I2C1/2/3/4/USART1/TIM15/LPTIM2/DFSDM1/CEC	SPI1/2/3/4/5/6/CEC	SPI2/3/SAI1/3/I2C4/UART4/DFSDM1	SPI2/3/6/USART1/2/3/6/UART7/SDMMC1	SPI6/SAI2/4/UART4/5/8/LPUART/SDMMC1/SPDIFRX1	SAI4/FDCAN1/FDACN2/TIM13/14/QUADSPI/FMC/SDMMC2/LCD/SPDIFRX1	SAI2/4/TIM8/QUADSPI/SDMMC2/OTG1_HS/OTG2_FS/LCD	I2C4/UART7/SWPMI1/TIM1/8/DFSDM1/SDMMC2/MDIOS/ETH	TIM1/8/FMC/SDMMC1/MDIOS/OTG1_FS/LCD	TIM1/DCMI/LCD/DSI/COMP	UART5/LCD	SYS
Port G	PG14	TRACED1	LPTIM1_ETR	-	-	-	SPI6_MOSI	-	USART6_TX	-	QUADSPI_BK2_IO3	-	ETH_MII_TXD1/ETH_RMII_TXD1	FMC_A25	-	LCD_B0	EVENTOUT
	PG15	-	-	-	-	-	-	-	USART6_CTS/USART6_NSS	-	-	-	-	FMC_SDNCAS	DCMI_D13	-	EVENTOUT

Table 16. Port H alternate functions

Port		AF0	AF1	AF2	AF3	AF4	AF5	AF6	AF7	AF8	AF9	AF10	AF11	AF12	AF13	AF14	AF15
		SYS	TIM1/2/16/17/LPTIM1/HRTIM1	SAI1/TIM3/4/5/12/HRTIM1	LPUART/TIM8/LPTIM2/3/4/5/HRTIM1/DFSDM1	I2C1/2/3/4/USART1/TIM15/LPTIM2/DFSDM1/CEC	SPI1/2/3/4/5/6/CEC	SPI2/3/SAI1/3/I2C4/UART4/DFSDM1	SPI2/3/6/USART1/2/3/6/UART7/SDMMC1	SPI6/SAI2/4/UART4/5/8/LPUART/SDMMC1/SPDIFRX1	SAI4/FDCAN1/FDACN2/TIM13/14/QUADSPI/FMC/SDMMC2/LCD/SPDIFRX1	SAI2/4/TIM8/QUADSPI/SDMMC2/OTG1_HS/OTG2_FS/LCD	I2C4/UART7/SWPMI1/TIM1/8/DFSDM1/SDMMC2/MDIOS/ETH	TIM1/8/FMC/SDMMC1/MDIOS/OTG1_FS/LCD	TIM1/DCMI/LCD/DSI/COMP	UART5/LCD	SYS
Port H	PH0	-	-	-	-	-	-	-	-	-	-	-	-	-	-	-	EVENT OUT
	PH1	-	-	-	-	-	-	-	-	-	-	-	-	-	-	-	EVENT OUT
	PH2	-	LPTIM1_IN2	-	-	-	-	-	-	-	QUADSPI_BK2_IO0	SAI2_SCK_B	ETH_MII_CRS	FMC_SDCKE0	-	LCD_R0	EVENT OUT
	PH3	-	-	-	-	-	-	-	-	-	QUADSPI_BK2_IO1	SAI2_MCLK_B	ETH_MII_COL	FMC_SDNE0	-	LCD_R1	EVENT OUT
	PH4	-	-	-	-	I2C2_SCL	-	-	-	-	LCD_G5	OTG_HS_ULPI_NXT	-		-	LCD_G4	EVENT OUT
	PH5	-	-	-	-	I2C2_SDA	SPI5_NSS	-	-	-	-	-	-	FMC_SDNWE	-	-	EVENT OUT
	PH6	-	-	TIM12_CH1	-	I2C2_SMBA	SPI5_SCK	-	-	-	-	-	ETH_MII_RXD2	FMC_SDNE1	DCMI_D8	-	EVENT OUT
	PH7	-	-		-	I2C3_SCL	SPI5_MISO	-	-	-	-	-	ETH_MII_RXD3	FMC_SDCKE1	DCMI_D9	-	EVENT OUT
	PH8	-	-	TIM5_ETR	-	I2C3_SDA	-	-	-	-	-	-	-	FMC_D16	DCMI_HSYNC	LCD_R2	EVENT OUT
	PH9	-	-	TIM12_CH2	-	I2C3_SMBA	-	-	-	-	-	-	-	FMC_D17	DCMI_D0	LCD_R3	EVENT OUT
	PH10	-	-	TIM5_CH1	-	I2C4_SMBA	-	-	-	-	-	-	-	FMC_D18	DCMI_D1	LCD_R4	EVENT OUT
	PH11	-	-	TIM5_CH2	-	I2C4_SCL	-	-	-	-	-	-	-	FMC_D19	DCMI_D2	LCD_R5	EVENT OUT
	PH12	-	-	TIM5_CH3	-	I2C4_SDA	-	-	-	-	-	-	-	FMC_D20	DCMI_D3	LCD_R6	EVENT OUT
	PH13	-	-	-	TIM8_CH1N	-	-	-	-	UART4_TX	FDCAN1_TX	-	-	FMC_D21	-	LCD_G2	EVENT OUT
	PH14	-	-	-	TIM8_CH2N	-	-	-	-	UART4_RX	FDCAN1_RX	-	-	FMC_D22	DCMI_D4	LCD_G3	EVENT OUT
	PH15	-	-	-	TIM8_CH3N	-	-	-	-	-	-	-	-	FMC_D23	DCMI_D11	LCD_G4	EVENT OUT

Table 17. Port I alternate functions

Port		AF0	AF1	AF2	AF3	AF4	AF5	AF6	AF7	AF8	AF9	AF10	AF11	AF12	AF13	AF14	AF15
		SYS	TIM1/2/16/17/LPTIM1/HRTIM1	SAI1/TIM3/4/5/HRTIM1	LPUART/TIM8/LPTIM2/3/4/5/HRTIM1/DFSDM1	I2C1/2/3/4/USART1/TIM15/LPTIM2/DFSDM1/CEC	SPI1/2/3/4/5/6/CEC	SPI2/3/SAI1/3/I2C4/UART4/DFSDM1	SPI2/3/6/USART1/2/3/6/UART7/SDMMC1	SPI6/SAI2/4/UART4/5/8/LPUART/SDMMC1/SPDIFRX1	SAI4/FDCAN1/FDACN2/TIM13/14/QUADSPI/FMC/SDMMC2/LCD/SPDIFRX1	SAI2/4/TIM8/QUADSPI/SDMMC2/OTG1_HS/OTG2_FS/LCD	I2C4/UART7/SWPMI1/TIM1/8/DFSDM1/SDMMC2/MDIOS/ETH	TIM1/8/FMC/SDMMC1/MDIOS/OTG1_FS/LCD	TIM1/DCMI/LCD/DSI/COMP	UART5/LCD	SYS
Port I	PI0	-	-	TIM5_CH4	-	-	SPI2_NSS/I2S2_WS	-	-	-	-	-	-	FMC_D24	DCMI_D13	LCD_G5	EVENT OUT
	PI1	-	-	-	TIM8_BKIN2	-	SPI2_SCK/I2S2_CK	-	-	-	-	-	TIM8_BKIN2_COMP12	FMC_D25	DCMI_D8	LCD_G6	EVENT OUT
	PI2	-	-	-	TIM8_CH4	-	SPI2_MISO/I2S2_SDI	-	-	-	-	-	-	FMC_D26	DCMI_D9	LCD_G7	EVENT OUT
	PI3	-	-	-	TIM8_ETR	-	SPI2_MOSI/I2S2_SDO	-	-	-	-	-	-	FMC_D27	DCMI_D10	-	EVENT OUT
	PI4	-	-	-	TIM8_BKIN	-	-	-	-	-	-	SAI2_MCLK_A	TIM8_BKIN_COMP12	FMC_NBL2	DCMI_D5	LCD_B4	EVENT OUT
	PI5	-	-	-	TIM8_CH1	-	-	-	-	-	-	SAI2_SCK_A	-	FMC_NBL3	DCMI_VSYNC	LCD_B5	EVENT OUT
	PI6	-	-	-	TIM8_CH2	-	-	-	-	-	-	SAI2_SD_A	-	FMC_D28	DCMI_D6	LCD_B6	EVENT OUT
	PI7	-	-	-	TIM8_CH3	-	-	-	-	-	-	SAI2_FS_A	-	FMC_D29	DCMI_D7	LCD_B7	EVENT OUT
	PI8	-	-	-	-	-	-	-	-	-	-	-	-	-	-	-	EVENT OUT
	PI9	-	-	-	-	-	-	-	-	UART4_RX	FDCAN1_RX	-	-	FMC_D30	-	LCD_VSYNC	EVENT OUT
	PI10	-	-	-	-	-	-	-	-	-	-	-	ETH_MII_RX_ER	FMC_D31	-	LCD_HSYNC	EVENT OUT
	PI11	-	-	-	-	-	-	-	-	-	LCD_G6	OTG_HS_ULPI_DIR	-	-	-		EVENT OUT
	PI12	-	-	-	-	-	-	-	-	-	-	-	-	-	-	LCD_HSYNC	EVENT OUT
	PI13	-	-	-	-	-	-	-	-	-	-	-	-	-	-	LCD_VSYNC	EVENT OUT
	PI14	-	-	-	-	-	-	-	-	-	-	-	-	-	-	LCD_CLK	EVENT OUT
	PI15	-	-	-	-	-	-	-	-	-	LCD_G2	-	-	-	-	LCD_R0	EVENT OUT

Table 18. Port J alternate functions

Port		AF0	AF1	AF2	AF3	AF4	AF5	AF6	AF7	AF8	AF9	AF10	AF11	AF12	AF13	AF14	AF15
		SYS	TIM1/2/16/17/LPTIM1/HRTIM1	SAI1/TIM3/4/5/HRTIM1	LPUART/TIM8/LPTIM2/3/4/5/HRTIM1/DFSDM1	I2C1/2/3/4/USART1/TIM15/LPTIM2/DFSDM1/CEC	SPI1/2/3/4/5/6/CEC	SPI2/3/SAI1/3/I2C4/UART4/DFSDM1	SPI2/3/6/USART1/2/3/6/UART7/SDMMC1	SPI6/SAI2/4/UART4/5/8/LPUART/SDMMC1/SPDIFRX1	SAI4/FDCAN1/FDACN2/TIM13/14/QUADSPI/FMC/SDMMC2/LCD/SPDIFRX1	SAI2/4/TIM8/QUADSPI/SDMMC2/OTG1_HS/OTG2_FS/LCD	I2C4/UART7/SWPMI1/TIM1/8/DFSDM1/SDMMC2/MDIOS/ETH	TIM1/8/FMC/SDMMC1/MDIOS/OTG1_FS/LCD	TIM1/DCMI/LCD/DSI/COMP	UART5/LCD	SYS
Port J	PJ0	-	-	-	-	-	-	-	-	-	LCD_R7	-	-	-	-	LCD_R1	EVENT OUT
	PJ1	-	-	-	-	-	-	-	-	-	-	-	-	-	-	LCD_R2	EVENT OUT
	PJ2	-	-	-	-	-	-	-	-	-	-	-	-	-	DSI_TE	LCD_R3	EVENT OUT
	PJ3	-	-	-	-	-	-	-	-	-	-	-	-	-	-	LCD_R4	EVENT OUT
	PJ4	-	-	-	-	-	-	-	-	-	-	-	-	-	-	LCD_R5	EVENT OUT
	PJ5	-	-	-	-	-	-	-	-	-	-	-	-	-	-	LCD_R6	EVENT OUT
	PJ6	-	-	-	TIM8_CH2	-	-	-	-	-	-	-	-	-	-	LCD_R7	EVENT OUT
	PJ7	TRGIN	-	-	TIM8_CH2N	-	-	-	-	-	-	-	-	-	-	LCD_G0	EVENT OUT
	PJ8	-	TIM1_CH3N	-	TIM8_CH1	-	-	-	-	UART8_TX	-	-	-	-	-	LCD_G1	EVENT OUT
	PJ9	-	TIM1_CH3	-	TIM8_CH1N	-	-	-	-	UART8_RX	-	-	-	-	-	LCD_G2	EVENT OUT
	PJ10	-	TIM1_CH2N	-	TIM8_CH2	-	SPI5_MOSI	-	-	-	-	-	-	-	-	LCD_G3	EVENT OUT
	PJ11	-	TIM1_CH2	-	TIM8_CH2N	-	SPI5_MISO	-	-	-	-	-	-	-	-	LCD_G4	EVENT OUT
	PJ12	TRGOUT	-	-	-	-	-	-	-	-	LCD_G3	-	-	-	-	LCD_B0	EVENT OUT
	PJ13	-	-	-	-	-	-	-	-	-	LCD_B4	-	-	-	-	LCD_B1	EVENT OUT
	PJ14	-	-	-	-	-	-	-	-	-	-	-	-	-	-	LCD_B2	EVENT OUT
	PJ15	-	-	-	-	-	-	-	-	-	-	-	-	-	-	LCD_B3	EVENT OUT

Table 19. Port K alternate functions

Port		AF0	AF1	AF2	AF3	AF4	AF5	AF6	AF7	AF8	AF9	AF10	AF11	AF12	AF13	AF14	AF15
		SYS	TIM1/2/16/17/LPTIM1/HRTIM1	SAI1/TIM3/4/5/HRTIM1	LPUART/TIM8/LPTIM2/3/4/5/HRTIM1/DFSDM1	I2C1/2/3/4/USART1/TIM15/LPTIM2/DFSDM1/CEC	SPI1/2/3/4/5/6/CEC	SPI2/3/SAI1/3/I2C4/UART4/DFSDM1	SPI2/3/6/USART1/2/3/6/UART7/SDMMC1	SPI6/SAI2/4/UART4/5/8/LPUART/SDMMC1/SPDIFRX1	SAI4/FDCAN1/FDACN2/TIM13/14/QUADSPI/FMC/SDMMC2/LCD/SPDIFRX1	SAI2/4/TIM8/QUADSPI/SDMMC2/OTG1_HS/OTG2_FS/LCD	I2C4/UART7/SWPMI1/TIM1/8/DFSDM1/SDMMC2/MDIOS/ETH	TIM1/8/FMC/SDMMC1/MDIOS/OTG1_FS/LCD	TIM1/DCMI/LCD/DSI/COMP	UART5/LCD	SYS
Port K	PK0	-	TIM1_CH1N	-	TIM8_CH3	-	SPI5_SCK	-	-	-	-	-	-	-	-	LCD_G5	EVENT OUT
	PK1	-	TIM1_CH1	-	TIM8_CH3N	-	SPI5_NSS	-	-	-	-	-	-	-	-	LCD_G6	EVENT OUT
	PK2	-	TIM1_BKIN	-	TIM8_BKIN	-	-	-	-	-	-	TIM8_BKIN_COMP12	TIM1_BKIN_COMP12	-	-	LCD_G7	EVENT OUT
	PK3	-	-	-	-	-	-	-	-	-	-	-	-	-	-	LCD_B4	EVENT OUT
	PK4	-	-	-	-	-	-	-	-	-	-	-	-	-	-	LCD_B5	EVENT OUT
	PK5	-	-	-	-	-	-	-	-	-	-	-	-	-	-	LCD_B6	EVENT OUT
	PK6	-	-	-	-	-	-	-	-	-	-	-	-	-	-	LCD_B7	EVENT OUT
	PK7	-	-	-	-	-	-	-	-	-	-	-	-	-	-	LCD_DE	EVENT OUT

6 Electrical characteristics

6.1 Parameter conditions

Unless otherwise specified, all voltages are referenced to V_{SS}.

6.1.1 Minimum and maximum values

Unless otherwise specified the minimum and maximum values are guaranteed in the worst conditions of junction temperature, supply voltage and frequencies by tests in production on 100% of the devices with an junction temperature at T_J = 25 °C and $T_J = T_{Jmax}$ (given by the selected temperature range).

Data based on characterization results, design simulation and/or technology characteristics are indicated in the table footnotes. Based on characterization, the minimum and maximum values refer to sample tests and represent the mean value plus or minus three times the standard deviation (mean±3σ).

6.1.2 Typical values

Unless otherwise specified, typical data are based on T_J = 25 °C, V_{DD} = 3.3 V (for the 1.7 V ≤ V_{DD} ≤ 3.6 V voltage range). They are given only as design guidelines and are not tested.

Typical ADC accuracy values are determined by characterization of a batch of samples from a standard diffusion lot over the full temperature range, where 95% of the devices have an error less than or equal to the value indicated (mean±2σ).

6.1.3 Typical curves

Unless otherwise specified, all typical curves are given only as design guidelines and are not tested.

6.1.4 Loading capacitor

The loading conditions used for pin parameter measurement are shown in *Figure 11*.

6.1.5 Pin input voltage

The input voltage measurement on a pin of the device is described in *Figure 12*.

Figure 11. Pin loading conditions

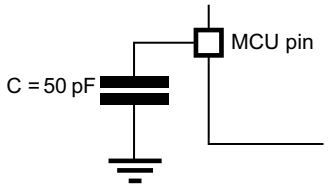

MS19011V2

Figure 12. Pin input voltage

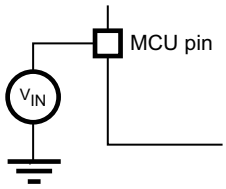

MS19010V2

6.1.6 Power supply scheme

Figure 13. Power supply scheme

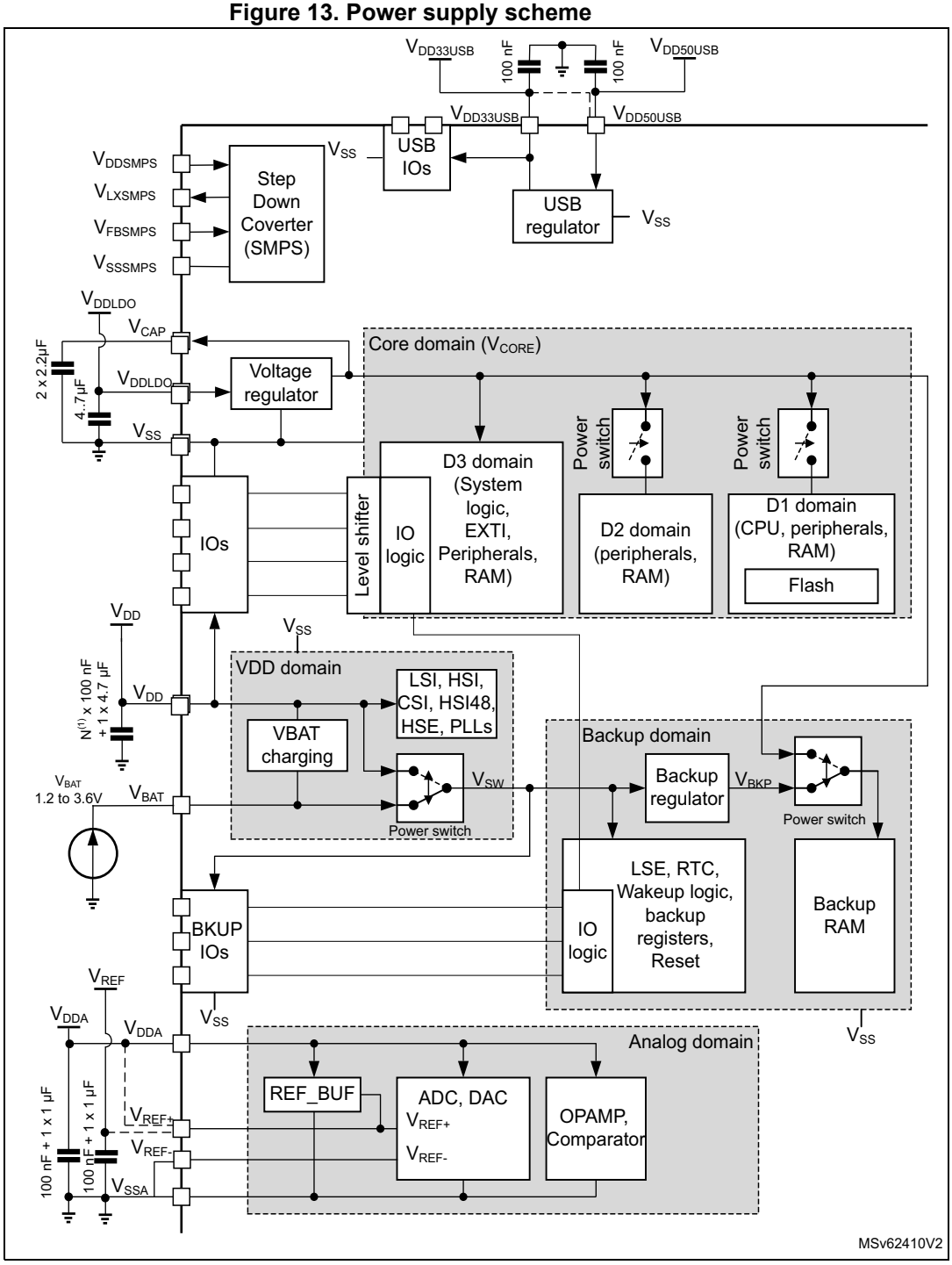

1. N corresponds to the number of VDD pins available on the package.
2. A tolerance of +/- 20% is acceptable on decoupling capacitors.
3. VCAPDSI pin must be externally connected to VDD12DSI pin.

Caution: Each power supply pair (V_{DD}/V_{SS}, V_{DDA}/V_{SSA} ...) must be decoupled with filtering ceramic capacitors as shown above. These capacitors must be placed as close as possible to, or

below, the appropriate pins on the underside of the PCB to ensure good operation of the device. It is not recommended to remove filtering capacitors to reduce PCB size or cost. This might cause incorrect operation of the device.

6.1.7 Current consumption measurement

Figure 14. Current consumption measurement scheme

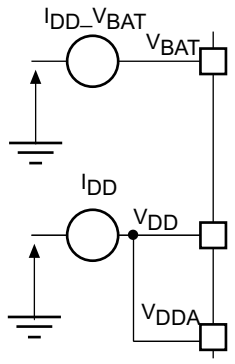

6.2 Absolute maximum ratings

Stresses above the absolute maximum ratings listed in *Table 20: Voltage characteristics*, *Table 21: Current characteristics*, and *Table 22: Thermal characteristics* may cause permanent damage to the device. These are stress ratings only and the functional operation of the device at these conditions is not implied. Exposure to maximum rating conditions for extended periods may affect device reliability. Device mission profile (application conditions) is compliant with JEDEC JESD47 Qualification Standard, extended mission profiles are available on demand.

Note: For information on product lifetime estimation, refer to application note AN5337: Guidelines for estimating STM32H7 MCUs lifetime, available from the STMicroelectronics website www.st.com.

Table 20. Voltage characteristics (1)

Symbols	Ratings	Min	Max	Unit
V_{DDX} - V_{SS}	External main supply voltage (including V_{DD}, V_{DDLDO}, V_{DDSMPS}, V_{DDA}, $V_{DD33USB}$, V_{BAT})	−0.3	4.0	V
V_{IN}(2)	Input voltage on FT_xxx pins	V_{SS}−0.3	Min(Min(V_{DD}, V_{DDA}, $V_{DD33USB}$, V_{BAT}) + 4.0, 6 V)(3)(4)(5)	V
	Input voltage on TT_xx pins	V_{SS}-0.3	4.0	V
	Input voltage on BOOT0 pin	V_{SS}	9.0	V
	Input voltage on any other pins	V_{SS}-0.3	4.0	V

Table 20. Voltage characteristics (continued)(1)

Symbols	Ratings	Min	Max	Unit
$\lvert\Delta V_{DDX}\rvert$	Variations between different V_{DDX} power pins of the same domain	-	50	mV
$\lvert V_{SSx}-V_{SS}\rvert$	Variations between all the different ground pins	-	50	mV

1. All main power (V_{DD}, V_{DDA}, $V_{DD33USB}$, V_{DDSMPS}, V_{BAT}) and ground (V_{SS}, V_{SSA}) pins must always be connected to the external power supply, in the permitted range.
2. V_{IN} maximum must always be respected. Refer to *Table 71: I/O current injection susceptibility* for the maximum allowed injected current values.
3. This formula has to be applied on power supplies related to the IO structure described by the pin definition table.
4. To sustain a voltage higher than 4V the internal pull-up/pull-down resistors must be disabled.
5. When an FT_a pin is used by an analog peripheral such as an ADC, the maximum V_{IN} is 4 V.

Table 21. Current characteristics

Symbols	Ratings	Max	Unit
ΣIV_{DD}	Total current into sum of all V_{DD} power lines (source)(1)	620	mA
ΣIV_{SS}	Total current out of sum of all V_{SS} ground lines (sink)(1)	620	
IV_{DD}	Maximum current into each V_{DD} power pin (source)(1)	100	
IV_{SS}	Maximum current out of each V_{SS} ground pin (sink)(1)	100	
I_{IO}	Output current sunk by any I/O and control pin, except Px_C	20	
	Output current sunk by Px_C pins	1	
$\Sigma I_{(PIN)}$	Total output current sunk by sum of all I/Os and control pins(2)	140	
	Total output current sourced by sum of all I/Os and control pins(2)	140	
$I_{INJ(PIN)}$(3)(4)	Injected current on FT_xxx, TT_xx, RST and B pins except PA4, PA5	−5/+0	
	Injected current on PA4, PA5	−0/0	
$\Sigma I_{INJ(PIN)}$	Total injected current (sum of all I/Os and control pins)(5)	±25	

1. All main power (V_{DD}, V_{DDA}, $V_{DD33USB}$) and ground (V_{SS}, V_{SSA}) pins must always be connected to the external power supplies, in the permitted range.
2. This current consumption must be correctly distributed over all I/Os and control pins. The total output current must not be sunk/sourced between two consecutive power supply pins referring to high pin count QFP packages.
3. Positive injection is not possible on these I/Os and does not occur for input voltages lower than the specified maximum value.
4. A positive injection is induced by $V_{IN}>V_{DD}$ while a negative injection is induced by $V_{IN}<V_{SS}$. $I_{INJ(PIN)}$ must never be exceeded. Refer also to *Table 20: Voltage characteristics* for the maximum allowed input voltage values.
5. When several inputs are submitted to a current injection, the maximum $\Sigma I_{INJ(PIN)}$ is the absolute sum of the positive and negative injected currents (instantaneous values).

Table 22. Thermal characteristics

Symbol	Ratings	Value	Unit
T_{STG}	Storage temperature range	− 65 to +150	°C
T_J	Maximum junction temperature	125	

6.3 Operating conditions

6.3.1 General operating conditions

Table 23. General operating conditions

Symbol	Parameter	Operating conditions	Min	Typ	Max	Unit
V_{DD}	Standard operating voltage	-	1.62(1)	-	3.6	V
V_{DDLDO}	Supply voltage for the internal regulator	$V_{DDLDO} \leq V_{DD}$	1.62(1)	-	3.6	V
			1.2(2)	-	3.6	
V_{DDSMPS}	Supply voltage for the internal SMPS Step-down converter	$V_{DDSMPS} = V_{DD}$	1.62(1)	-	3.6	V
$V_{DD33USB}$	Standard operating voltage, USB domain	USB used	3.0	-	3.6	V
		USB not used	0	-	3.6	
V_{DDA}	Analog operating voltage	ADC or COMP used	1.62	-	3.6	
		DAC used	1.8	-		
		OPAMP used	2.0	-		
		VREFBUF used	1.8	-		
		ADC, DAC, OPAMP, COMP, VREFBUF not used	0	-		
V_{IN}	I/O Input voltage	TT_xx I/O	−0.3	-	V_{DD}+0.3	
		BOOT0	0	-	9	
		All I/O except BOOT0 and TT_xx	−0.3	-	Min(V_{DD}, V_{DDA}, $V_{DD33USB}$) +3.6V < 5.5V(3)(4)	

Table 23. General operating conditions (continued)

Symbol	Parameter	Operating conditions	Min	Typ	Max	Unit
V_{CORE}	Internal regulator ON (LDO)(5)	VOS3	0.95	1.0	1.05	V
		VOS2	1.05	1.10	1.15	
		VOS1	1.15	1.20	1.26	
		VOS0(6)	1.26	1.35	1.40	
	Internal regulator ON (SMPS step-down converter)(7)	VOS3	0.95	1.0	1.05	
		VOS2	1.05	1.10	1.15	
		VOS1	1.15	1.20	1.26	
	Regulator OFF: external V_{CORE} voltage must be supplied from external regulator on two VCAP pins	VOS3	0.98	1.03	1.08	
		VOS2	1.08	1.13	1.17	
		VOS1	1.17	1.23	1.26	
		VOS0(5)	1.37	1.38	1.40	
f_{CPU1}	Arm® Cortex®-M7 clock frequency	VOS3	-	-	200	MHz
		VOS2	-	-	300	
		VOS1	-	-	400 / 480(8)	
		VOS0(5)	-	-	480(9)	
f_{CPU2}	Arm® Cortex®-M4 clock frequency	VOS3	-	-	100	
		VOS2	-	-	150	
		VOS1	-	-	200 / 240(8)	
		VOS0(5)	-	-	240(9)	
f_{ACLK}	AXI clock frequency	VOS3	-	-	100	
		VOS2	-	-	150	
		VOS1	-	-	200 / 240(8)	
		VOS0(5)	-	-	240(9)	
f_{HCLK}	AHB clock frequency	VOS3	-	-	100	
		VOS2	-	-	150	
		VOS1	-	-	200 / 240(8)	
		VOS0(5)	-	-	240(9)	
f_{PCLK}	APB clock frequency	VOS3	-	-	50(10)	
		VOS2	-	-	75	
		VOS1	-	-	100 / 120(8)	
		VOS0(5)	-	-	120(9)	

Table 23. General operating conditions (continued)

Symbol	Parameter	Operating conditions	Min	Typ	Max	Unit
T_A	Ambient temperature for the suffix 6 version	Maximum power dissipation		–40	85	°C
		Low-power dissipation(11)		–40	105	
T_J	Junction temperature range	Suffix 6 version		–40	125	°C

1. When RESET is released functionality is guaranteed down to V_{BOR0} min
2. Only for power-up sequence when the SMPS step-down converter is configured to supply the LDO and T_{JMax} = 105 °C.
3. This formula has to be applied on power supplies related to the IO structure described by the pin definition table.
4. For operation with voltage higher than Min (V_{DD}, V_{DDA}, $V_{DD33USB}$) + 0.3V, the internal Pull-up and Pull-Down resistors must be disabled.
5. Not available on STM32H757XIH6A.
6. VOS0 is available only when the LDO regulator is ON.
7. At startup, the external V_{CORE} voltage must remain higher or equal to 1.10 V before disabling the internal regulator (LDO).
8. Available only on STM32H757XIH6A.
9. T_{JMax} = 105 °C.
10. Maximum APB clock frequency when at least one peripheral is enabled.
11. In low-power dissipation state, T_A can be extended to this range as long as T_J does not exceed T_{Jmax} (see *Section 7.7: Thermal characteristics*).

Table 24. Supply voltage and maximum frequency configuration

Power scale	V_{CORE} source	Max T_J (°C)	Max frequency (MHz)	Min V_{DDLDO} (V)
VOS0(1)	LDO	105	480	1.7
	SMPS step-down converter(2)	-	-	-
VOS1	LDO(1)	125	400/480(3)	1.62
	SMPS step-down converter			
VOS2	LDO(1)	125	300	1.62
	SMPS step-down converter	125		
VOS3	LDO(1)(4)	105	64	1.2(4)
	LDO(1)	125	200	1.62
	SMPS step-down converter	125		
SVOS4	LDO(1)	105	N/A	1.62
	SMPS step-down converter	125		
SVOS5	LDO(1)	105	N/A	1.62
	SMPS step-down converter	125		

1. Not available on STM32H757XIH6A.

2. VOS0 (power scale 0) is not available when the SMPS step-down converter directly supplies V_{CORE}.
3. 480 MHz available only on STM32H757XIH6A.
4. Only for power-up sequence when the SMPS step-down converter supplies the LDO.

6.3.2 VCAP external capacitor

Stabilization for the main regulator is achieved by connecting an external capacitor C_{EXT} to the VCAP pin. C_{EXT} is specified in *Table 25*. Two external capacitors can be connected to VCAP pins.

Figure 15. External capacitor C_{EXT}

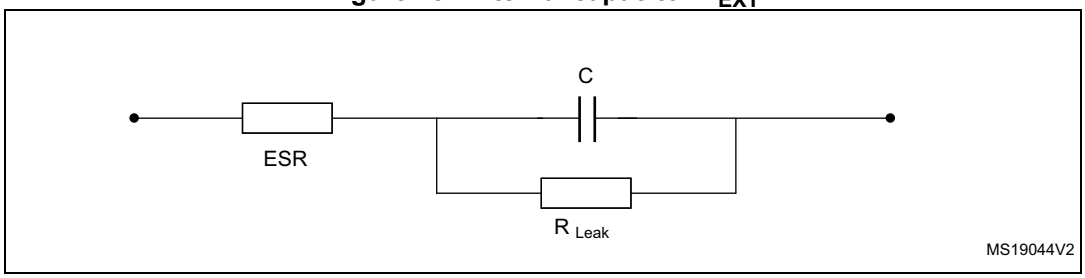

1. Legend: ESR is the equivalent series resistance.

Table 25. VCAP operating conditions(1)

Symbol	Parameter	Conditions
CEXT	Capacitance of external capacitor	2.2 µF(2)
ESR	ESR of external capacitor	< 100 mΩ

1. When bypassing the voltage regulator, the two 2.2 µF V_{CAP} capacitors are not required and should be replaced by two 100 nF decoupling capacitors.
2. This value corresponds to CEXT typical value. A variation of +/-20% is tolerated.

6.3.3 SMPS step-down converter

The devices embed a high power efficiency SMPS step-down converter. SMPS characteristics for external usage are given in *Table 27*. The SMPS step-down converter requires external components that are specified in *Figure 16* and *Table 26*.

Figure 16. External components for SMPS step-down converter

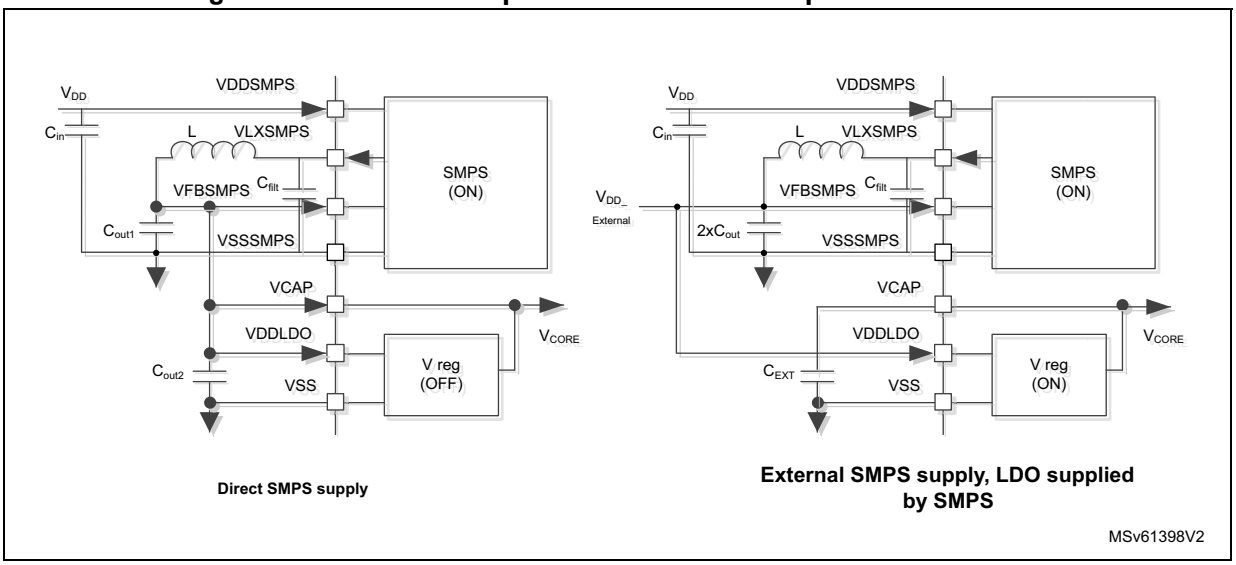

Table 26. Characteristics of SMPS step-down converter external components

Symbol	Parameter	Conditions
C_{in}	Capacitance of external capacitor on V_{DDSMPS}	4.7 µF
	ESR of external capacitor	100 mΩ
C_{filt}	Capacitance of external capacitor on V_{LXSMPS} pin	220 pF
C_{OUT}	Capacitance of external capacitor on V_{FBSMPS} pin	10 µF
	ESR of external capacitor	20 mΩ
L	Inductance of external Inductor on V_{LXSMPS} pin	2.2 µH
-	Serial DC resistor	150 mΩ
I_{SAT}	DC current at which the inductance drops 30% from its value without current.	1.7 A
I_{RMS}	Average current for a 40 °C rise: rated current for which the temperature of the inductor is raised 40°C by DC current	1.4 A

Table 27. SMPS step-down converter characteristics for external usage

Parameters	Conditions	Min	Typ	Max	Unit
V_{DDSMPS}(1)	V_{OUT} = 1.8 V	2.3	-	3.6	V
	V_{OUT} = 2.5 V	3	-	3.6	
V_{OUT}(2)	Iout=600 mA	2.25	2.5	2.75	V
		1.62	1.8	1.98	
I_{OUT}	internal and external usage	-	-	600	mA
	External usage only(3)	-	-	600	
RDS_{ON}	-	-	100	120	mΩ

Table 27. SMPS step-down converter characteristics for external usage (continued)

Parameters	Conditions	Min	Typ	Max	Unit
I_{DDSMPS_Q}	Quiescent current	-	220	-	µA
T_{SMPS_START}	V_{OUT} = 1.8 V	-	-	225	µs
	V_{OUT} = 2.5 V	-	-	300	

1. The switching frequency is 2.4 MHz±10%
2. Including line transient and load transient.
3. These characteristics are given for SDEXTHP bit is set in the PWR_CR3 register.

6.3.4 Operating conditions at power-up / power-down

Subject to general operating conditions for T_A.

Table 28. Operating conditions at power-up / power-down (regulator ON)

Symbol	Parameter	Min	Max	Unit
t_{VDD}	V_{DD} rise time rate	0	∞	µs/V
	V_{DD} fall time rate	10	∞	
t_{VDDA}	V_{DDA} rise time rate	0	∞	
	V_{DDA} fall time rate	10	∞	
t_{VDDUSB}	V_{DDUSB} rise time rate	0	∞	
	V_{DDUSB} fall time rate	10	∞	

6.3.5 Embedded reset and power control block characteristics

The parameters given in *Table 29* are derived from tests performed under ambient temperature and V_{DD} supply voltage conditions summarized in *Table 23: General operating conditions*.

Table 29. Reset and power control block characteristics

Symbol	Parameter	Conditions	Min	Typ	Max	Unit
$t_{RSTTEMPO}$(1)	Reset temporization after BOR0 released	-	-	377	-	µs
$V_{BOR0/POR/PDR}$	Brown-out reset threshold 0 (V_{POR}/V_{PDR} thresholds)	Rising edge(1)	1.62	1.67	1.71	V
		Falling edge	1.58	1.62	1.68	
V_{BOR1}	Brown-out reset threshold 1	Rising edge	2.04	2.10	2.15	
		Falling edge	1.95	2.00	2.06	
V_{BOR2}	Brown-out reset threshold 2	Rising edge	2.34	2.41	2.47	
		Falling edge	2.25	2.31	2.37	
V_{BOR3}	Brown-out reset threshold 3	Rising edge	2.63	2.70	2.78	
		Falling edge	2.54	2.61	2.68	
V_{PVD0}	Programmable Voltage Detector threshold 0	Rising edge	1.90	1.96	2.01	
		Falling edge	1.81	1.86	1.91	
V_{PVD1}	Programmable Voltage Detector threshold 1	Rising edge	2.05	2.10	2.16	
		Falling edge	1.96	2.01	2.06	
V_{PVD2}	Programmable Voltage Detector threshold 2	Rising edge	2.19	2.26	2.32	
		Falling edge	2.10	2.15	2.21	
V_{PVD3}	Programmable Voltage Detector threshold 3	Rising edge	2.35	2.41	2.47	
		Falling edge	2.25	2.31	2.37	
V_{PVD4}	Programmable Voltage Detector threshold 4	Rising edge	2.49	2.56	2.62	
		Falling edge	2.39	2.45	2.51	
V_{PVD5}	Programmable Voltage Detector threshold 5	Rising edge	2.64	2.71	2.78	
		Falling edge	2.55	2.61	2.68	
V_{PVD6}	Programmable Voltage Detector threshold 6	Rising edge	2.78	2.86	2.94	
		Falling edge in Run mode	2.69	2.76	2.83	
$V_{hyst_BOR_PVD}$	Hysteresis voltage of BOR (unless BOR0) and PVD	Hysteresis in Run mode	-	100	-	mV
$I_{DD_BOR_PVD}$(1)	BOR(2) (unless BOR0) and PVD consumption from V_{DD}	-	-	-	0.630	µA

Table 29. Reset and power control block characteristics (continued)

Symbol	Parameter	Conditions	Min	Typ	Max	Unit
V_{AVM_0}	Analog voltage detector for V_{DDA} threshold 0	Rising edge	1.66	1.71	1.76	V
		Falling edge	1.56	1.61	1.66	
V_{AVM_1}	Analog voltage detector for V_{DDA} threshold 1	Rising edge	2.06	2.12	2.19	
		Falling edge	1.96	2.02	2.08	
V_{AVM_2}	Analog voltage detector for V_{DDA} threshold 2	Rising edge	2.42	2.50	2.58	
		Falling edge	2.35	2.42	2.49	
V_{AVM_3}	Analog voltage detector for V_{DDA} threshold 3	Rising edge	2.74	2.83	2.91	
		Falling edge	2.64	2.72	2.80	
V_{hyst_VDDA}	Hysteresis of V_{DDA} voltage detector	-	-	100	-	mV
I_{DD_PVM}	PVM consumption from $V_{DD(1)}$	-	-	-	0.25	µA
I_{DD_VDDA}	Voltage detector consumption on V_{DDA}(1)	Resistor bridge	-	-	2.5	µA

1. Guaranteed by design.
2. BOR0 is enabled in all modes and its consumption is therefore included in the supply current characteristics tables (refer to *Section 6.3.7: Supply current characteristics*).

6.3.6 Embedded reference voltage

The parameters given in *Table 30* are derived from tests performed under ambient temperature and V_{DD} supply voltage conditions summarized in *Table 23: General operating conditions*.

Table 30. Embedded reference voltage

Symbol	Parameter	Conditions	Min	Typ	Max	Unit
V_{REFINT}	Internal reference voltages	-40°C < TJ < 125 °C, V_{DD} = 3.3 V	1.180	1.216	1.255	V
$t_{S_vrefint}$(1)(2)	ADC sampling time when reading the internal reference voltage	-	4.3	-	-	µs
t_{S_vbat}(1)(2)	VBAT sampling time when reading the internal VBAT reference voltage	-	9	-	-	
I_{refbuf}(2)	Reference Buffer consumption for ADC	V_{DDA}=3.3 V	9	13.5	23	µA
ΔV_{REFINT}(2)	Internal reference voltage spread over the temperature range	-40°C < T_J < 125 °C	-	5	15	mV
T_{coeff}(2)	Average temperature coefficient	Average temperature coefficient	-	20	70	ppm/°C
$V_{DDcoeff}$(2)	Average Voltage coefficient	3.0V < V_{DD} < 3.6V	-	10	1370	ppm/V

Table 30. Embedded reference voltage (continued)

Symbol	Parameter	Conditions	Min	Typ	Max	Unit
V_{REFINT_DIV1}	1/4 reference voltage	-	-	25	-	% V_{REFINT}
V_{REFINT_DIV2}	1/2 reference voltage	-	-	50	-	
V_{REFINT_DIV3}	3/4 reference voltage	-	-	75	-	

1. The shortest sampling time for the application can be determined by multiple iterations.
2. Guaranteed by design.

Table 31. Internal reference voltage calibration values

Symbol	Parameter	Memory address
V_{REFIN_CAL}	Raw data acquired at temperature of 30 °C, V_{DDA} = 3.3 V	1FF1E860 - 1FF1E861

6.3.7 Supply current characteristics

The current consumption is a function of several parameters and factors such as the operating voltage, ambient temperature, I/O pin loading, device software configuration, operating frequencies, I/O pin switching rate, program location in memory and executed binary code.

The current consumption is measured as described in *Figure 14: Current consumption measurement scheme*.

All the run-mode current consumption measurements given in this section are performed with a CoreMark code.

Typical and maximum current consumption

The MCU is placed under the following conditions:

- All I/O pins are in analog input mode.
- All peripherals are disabled except when explicitly mentioned.
- The flash memory access time is adjusted with the minimum wait states number, depending on the f_{ACLK} frequency (refer to the table “Number of wait states according to CPU clock ($f_{rcc_c_ck}$) frequency and V_{CORE} range” available in the reference manual).
- When the peripherals are enabled, the AHB clock frequency is the CPU1 frequency divided by 2 and the APB clock frequency is AHB clock frequency divided by 2.

The parameters given in the below tables are derived from tests performed under ambient temperature and supply voltage conditions summarized in *Table 23: General operating conditions*.

Table 32. Typical and maximum current consumption in Run mode, code with data processing running from ITCM for Cortex-M7 core, and flash memory for Cortex-M4 (ART accelerator ON), LDO regulator ON(1)(2)

Symbol	Parameter	Conditions		Arm Cortex-M7 f_{CPU1} (MHz)	Arm Cortex-M4 f_{CPU2} (MHz)	Typ	Max(3)				Unit
							Tj= 25 °C	Tj= 85 °C	Tj= 105°C	Tj= 125°C	
I_{DD}	Supply current in Run mode	All peripherals disabled	VOS0	480	240	179	272	387	498	-	mA
				400	200	151	-	-	-	-	
			VOS1	400	200	132	181	292	382	502	
			VOS2	300	150	91	122	211	281	377	
			VOS3	200	100	56	79	150	206	284	
		All peripherals enabled	VOS0	480	240	247	374	462	571	-	
				400	200	208	-	-	-	-	
			VOS1	400	200	181	232	337	422	541	
			VOS2	300	150	126	163	248	318	414	
			VOS3	200	100	78	104	173	229	307	

1. Data are in DTCM for best computation performance, the cache has no influence on consumption in this case.
2. The grayed cells correspond to the forbidden configurations.
3. Guaranteed by characterization results, unless otherwise specified.

Table 33. Typical and maximum current consumption in Run mode, code with data processing running from ITCM for Arm Cortex-M7 and flash memory for Arm Cortex-M4, ART accelerator ON, SMPS regulator(1)

Symbol	Parameter	Conditions		Arm Cortex-M7 f_{CPU1} (MHz)	Arm Cortex-M4 f_{CPU2} (MHz)	Typ	Max				Unit
							Tj= 25 °C	Tj= 85 °C	Tj= 105°C	Tj= 125°C	
All products, except STM32H757XIH6A											
I_{DD}	Supply current in Run mode	All peripherals disabled	VOS1	400	200	58.3	79.0	129.0	175.1	236.0	mA
			VOS2	300	150	37.0	50.2	84.7	115.6	161.1	
			VOS3	200	100	21.5	29.9	56.1	77.1	107.6	
		All peripherals enabled	VOS1	400	200	78.1	100.1	148.9	193.4	254.3	
			VOS2	300	150	51.2	65.5	100.8	130.9	176.9	
			VOS3	200	100	29.5	39.4	63.9	86.7	116.3	

Table 33. Typical and maximum current consumption in Run mode, code with data processing running from ITCM for Arm Cortex-M7 and flash memory for Arm Cortex-M4, ART accelerator ON, SMPS regulator(1) (continued)

Symbol	Parameter	Conditions		Arm Cortex-M7 f_{CPU1} (MHz)	Arm Cortex-M4 f_{CPU2} (MHz)	Typ	Max				Unit
							Tj= 25 °C	Tj= 85 °C	Tj= 105°C	Tj= 125°C	
STM32H757XIH6A only											
I_{DD}	Supply current in Run mode	All peripherals disabled	VOS1(2)	480	240	74.0	82.0	124.0	155.0	198.0	mA
			VOS1	400	200	62.0	75.0	115.0	147.5	102.0	
		All peripherals enabled	VOS1(2)	480	240	98.0	112.0	152.0	184.0	226.0	
			VOS1	400	200	82.0	99.0	138.0	170.0	215.0	

1. The parameters given in the above table for the SMPS regulator are derived by extrapolation from the LDO consumption and typical SMPS efficiency factors.
2. Available for STM32H757XIH6A.

Table 34. Typical and maximum current consumption in Run mode, code with data processing running from flash memory, both cores running, cache ON, ART accelerator ON, LDO regulator ON(1)

Symbol	Parameter	Conditions		Arm Cortex-M7 f_{CPU1} (MHz)	Arm Cortex-M4 f_{CPU2} (MHz)	Typ	Max(2)				Unit
							Tj= 25 °C	Tj= 85 °C	Tj= 105°C	Tj= 125°C	
I_{DD}	Supply current in Run mode	All peripherals disabled	VOS0	480	240	173	268	385	496	-	mA
				400	200	147	-	-	-	-	
			VOS1	400	200	128	175	288	379	499	
			VOS2	300	150	88	120	209	279	374	
			VOS3	200	100	55	77	149	205	283	
		All peripherals enabled	VOS0	480	240	242	368	459	569	-	
			VOS1	400	200	178	229(3)	334	419(3)	537	
			VOS2	300	150	123	161	246	316	412	
			VOS3	200	100	77	102	172	228	306	

1. The grayed cells correspond to the forbidden configurations.
2. Guaranteed by characterization results, unless otherwise specified.
3. Guaranteed by tests in production.

Table 35. Typical and maximum current consumption in Run mode, code with data processing running from flash memory, both cores running, cache OFF, ART accelerator OFF, LDO regulator ON(1)

Symbol	Parameter	Conditions		Arm Cortex-M7 f_{CPU1} (MHz)	Arm Cortex-M4 f_{CPU2} (MHz)	Typ	Max(2)				Unit
							Tj= 25 °C	Tj= 85 °C	Tj= 105°C	Tj= 125°C	
I_{DD}	Supply current in Run mode	All peripherals disabled	VOS0	480	240	109	191	330	444	-	mA
			VOS1	400	200	96	149	256	347	468	
			VOS2	300	150	67	95	187	257	354	
			VOS3	200	100	43	62	136	192	270	
		All peripherals enabled	VOS0	480	240	178	291	403	517	-	
			VOS1	400	200	147	224	310	401	523	
			VOS2	300	150	103	136	224	295	392	
			VOS3	200	100	64	87	159	215	293	

1. The grayed cells correspond to the forbidden configurations.
2. Guaranteed by characterization results, unless otherwise specified.

Table 36. Typical and maximum current consumption in Run mode, code with data processing running from ITCM, only Arm Cortex-M7 running, LDO regulator ON(1)(2)

Symbol	Parameter	Conditions		f_{CPU1} (MHz)	Typ	Max(3)				Unit
						Tj=25 °C	Tj=85 °C	Tj=105 °C	Tj=125 °C	
I_{DD}	Supply current in Run mode	All peripherals disabled	VOS0	480	148	226	307	390	-	mA
				400	125	-	-	-	-	
			VOS1	400	110	168	230	296	384	
				300	84	-	-	-	-	
			VOS2	300	76	114	170	224	297	
				216	56	88	152	205	278	
				200	53	-	-	-	-	
			VOS3	200	47	71	121	164	223	
				180	43	64	116	159	218	
				168	40	63	115	158	217	
				144	35	55	109	153	212	
				60	16	36	92	135	194	
				25	12	24	83	126	185	
		All peripherals enabled	VOS0	480	226	222	439	550	-	
				400	190	-	-	-	-	
			VOS1	400	167	222	327	416	536	
				300	135	-	-	-	-	
			VOS2	300	122	160	248	320	419	
				200	85	-	-	-	-	
			VOS3	200	76	103	174	233	313	

1. Data are in DTCM for best computation performance, the cache has no influence on consumption in this case.
2. The grayed cells correspond to the forbidden configurations.
3. Guaranteed by characterization results, unless otherwise specified.

Table 37. Typical and maximum current consumption in Run mode, code with data processing running from ITCM, only Arm Cortex-M7 running, SMPS regulator(1)

Symbol	Parameter	Conditions		f_{CPU1} (MHz)	Typ	Max				Unit
						Tj=25 °C	Tj=85 °C	Tj=105 °C	Tj=125 °C	
All products, except STM32H757XIH6A										
I_{DD}	Supply current in Run mode	All peripherals disabled	VOS1	400	48.6	73.3	100.4	132.4	176.0	mA
			VOS2	300	31.3	46.3	68.3	90.0	122.2	
			VOS3	200	18.0	26.9	45.3	60.6	82.4	
		All peripherals enabled	VOS1	400	72.9	95.8	144.5	190.7	252.0	
			VOS2	300	49.6	64.3	99.6	131.7	179.1	
			VOS3	200	28.8	38.5	64.3	88.3	118.6	
STM32H757XIH6A only										
I_{DD}	Supply current in Run mode	All peripherals disabled	VOS1 (2)	480	57.0	59.2	92.0	128.0	160.0	mA
			VOS1	400	46.0	51.6	90.0	120.0	150.0	
		All peripherals enabled	VOS1 (2)	480	92.0	107.0	146.0	179.0	195.0	
			VOS1	400	76.9	94.0	135.0	165.0	180.0	

1. The parameters given in the above table for the SMPS regulator are derived by extrapolation from the LDO consumption and typical SMPS efficiency factors.
2. Available for STM32H757XIH6A.

Table 38. Typical and maximum current consumption in Run mode, code with data processing running from flash memory, only Arm Cortex-M7 running, cache ON, LDO regulator ON(1)

Symbol	Parameter	Conditions		f_{CPU1} (MHz)	Typ	Max(2)				Unit
						Tj=25 °C	Tj=85 °C	Tj=105 °C	Tj=125 °C	
I_{DD}	Supply current in Run mode	All peripherals disabled	VOS0	480	110	222	304	388	-	mA
				400	91	-	-	-	-	
			VOS1	400	80	162	228	294	381	
				300	61.5	-	-	-	-	
			VOS2	216	55	111	168	222	294	
				200	38.5	-	-	-	-	
			VOS3	200	34.5	69	120	163	222	
		All peripherals enabled	VOS0	480	220	342	436	546	-	
				400	195	-	-	-	-	
			VOS1	400	175	264	336	424	544	
				300	135	-	-	-	-	
			VOS2	300	120	180	246	318	418	
				200	83	-	-	-	-	
			VOS3	200	75	114	173	232	312	

1. The grayed cells correspond to the forbidden configurations.
2. Guaranteed by characterization results, unless otherwise specified.

Table 39. Typical and maximum current consumption in Run mode, code with data processing running from flash memory, only Arm Cortex-M7 running, cache OFF, LDO regulator ON(1)

Symbol	Parameter	Conditions		f_{CPU1} (MHz)	Typ	Max(2)				Unit
						Tj=25°C	Tj=85°C	Tj=105 °C	Tj=125 °C	
I_{DD}	Supply current in Run mode	All peripherals disabled	VOS0	480	87	157	259	342	-	mA
			VOS1	400	73	123	201	267	355	
			VOS2	300	52	85	150	204	277	
			VOS3	200	34	54	109	152	212	
		All peripherals enabled	VOS0	480	168	276	390	504	-	
			VOS1	400	135	224	308	397	519	
			VOS2	300	100	154	228	301	401	
			VOS3	200	70	103	167	226	307	

1. The grayed cells correspond to the forbidden configurations.
2. Guaranteed by characterization results, unless otherwise specified.

Table 40. Typical and maximum current consumption batch acquisition mode, LDO regulator ON

Symbol	Parameter	Conditions		f_{HCLK} (MHz)	Typ	Max(1)				Unit
						Tj=25°C	Tj=85°C	Tj=105 °C	Tj=125 °C	
I_{DD}	Supply current in batch acquisition mode	D1 Standby, D2 Standby, D3 Run	VOS3	64	2.7	4.7	12.9	19.0	27.5	mA
				8	1.1	-	-	-	-	
		D1 Stop, D2 Stop, D3 Run	VOS3	64	5.4	18.4	83.7	132.6	202.4	
				8	3.8	-	-	-	-	

1. Guaranteed by characterization results, unless otherwise specified.

Table 41. Typical and maximum current consumption in Run mode, code with data processing running from flash memory, only Arm Cortex-M4 running, ART accelerator ON, LDO regulator ON(1)

Symbol	Parameter	Conditions		f_{CPU2} (MHz)	Typ	Max(2)				Unit
						Tj=25 °C	Tj=85 °C	Tj=105 °C	Tj=125 °C	
I_{DD}	Supply current in Run mode	All peripherals disabled	VOS0	240	121	203	339	453	-	mA
				200	90	-	-	-	-	
			VOS1	200	79	123	234	323	444	
				150	61	-	-	-	-	
			VOS2	150	56	85	178	250	350	
			VOS3	100	35	59	131	189	269	
		All peripherals enabled	VOS0	240	190	303	412	525	-	
				200	146	-	-	-	-	
			VOS1	200	129	195	287	376	499	
			VOS2	150	90	134	214	287	386	
			VOS3	100	61	100	158	216	297	

1. The grayed cells correspond to the forbidden configurations.
2. Guaranteed by characterization results, unless otherwise specified.

Table 42. Typical and maximum current consumption in Run mode, code with data processing running from flash bank 2, only Arm Cortex-M4 running, ART accelerator ON, SMPS regulator(1)

Symbol	Parameter	Conditions		Typ	Max				Unit
					Tj=25 °C	Tj=85 °C	Tj=105 °C	Tj=125 °C	
I_{DD}	Supply current in Run mode	All peripherals disabled	VOS1	35.3	54.3	102.1	144.4	203.5	mA
			VOS2	23.3	35.0	70.6	99.2	145.8	
			VOS3	13.6	22.3	49.0	69.8	101.9	
		All peripherals enabled	VOS1	57.0	84.1	126.8	172.3	234.6	
			VOS2	36.6	54.5	84.9	118.1	165.0	
			VOS3	23.1	37.4	58.4	79.8	112.5	

1. The parameters given in the above table for the SMPS regulator are derived by extrapolation from the LDO consumption and typical SMPS efficiency factors.

Table 43. Typical and maximum current consumption in Stop, LDO regulator ON

Symbol	Parameter	Conditions		Typ	Max(1)				Unit
					Tj=25°C	Tj=85°C	Tj=105 °C	Tj=125 °C	
$I_{DD\ (Stop)}$	D1 Stop, D2 Stop, D3 Stop	Flash memory OFF, no IWDG	SVOS5	1.27	6.3	42.5	72.0	-	mA
			SVOS4	1.96	9.4	57.4	94.6	-	
			SVOS3	2.78	13.8(2)	75.9	121.3(2)	183.8	
		Flash memory ON, no IWDG	SVOS5	1.27	6.3	42.5	72.0	-	
			SVOS4	2.25	9.8	57.9	95.2	-	
			SVOS3	3.07	14.1	76.4	122.0	184.8	
	D1 Stop, D2 Standby, D3 Stop	Flash memory OFF, no IWDG	SVOS5	0.91	4.6	30.4	51.2	-	
			SVOS4	1.42	6.8	41.1	67.3	-	
			SVOS3	2.02	10.0	54.4	86.6	130.0	
		Flash memory ON, no IWDG	SVOS5	0.91	4.6	30.4	51.2	-	
			SVOS4	1.70	7.2	41.5	67.9	-	
			SVOS3	2.31	10.3	54.9	87.1	130.8	
	D1 Standby, D2 Stop, D3 Stop	Flash memory OFF, no IWDG	SVOS5	0.49	2.4	16.5	28.0	-	
			SVOS4	0.76	3.6	22.2	36.6	-	
			SVOS3	1.10	5.3	29.3	46.9	71.2	
	D1 Standby, D2 Standby, D3 Stop		SVOS5	0.15	0.7(2)	4.3	7.3(2)	-	
			SVOS4	0.22	1.0	5.8	9.6	-	
			SVOS3	0.35	1.5(2)	7.8	12.3(2)	18.6	

1. Guaranteed by characterization results, unless otherwise specified.
2. Guaranteed by tests in production.

Table 44. Typical and maximum current consumption in Stop, SMPS regulator(1)

Symbol	Parameter	Conditions		Typ	Max				Unit
					Tj=25°C	Tj=85°C	Tj=105 °C	Tj=125 °C	
$I_{DD\ (Stop)}$	D1 Stop, D2 Stop, D3 Stop	Flash OFF, no IWDG	SVOS5	0.36	1.73	11.91	21.53	-	mA
			SVOS4	0.63	3.05	19.57	33.51	-	
			SVOS3	1.00	4.98	29.11	47.13	68.76	
		Flash ON, no IWDG	SVOS5	0.36	1.73	11.91	21.53	-	
			SVOS4	0.73	3.18	19.74	33.72	-	
			SVOS3	1.11	5.09	29.31	47.40	69.14	
	D1 Stop, D2 Standby, D3 Stop	Flash OFF, no IWDG	SVOS5	0.25	1.24	8.21	14.00	-	
			SVOS4	0.46	2.21	14.01	22.94	-	
			SVOS3	0.73	3.57	19.62	32.80	49.24	
		Flash ON, no IWDG	SVOS5	0.25	1.24	8.21	14.00	-	
			SVOS4	0.55	2.34	14.15	23.15	-	
			SVOS3	0.83	3.67	19.81	32.99	49.55	
	D1 Standby, D2 Stop, D3 Stop	Flash OFF, no IWDG	SVOS5	0.15	0.67	4.51	7.85	-	
			SVOS4	0.26	1.17	7.21	12.32	-	
			SVOS3	0.40	1.90	10.57	17.12	26.97	
	D1 Standby, D2 Standby, D3 Stop	Flash ON, no IWDG	SVOS5	0.06	0.20	1.18	2.05	-	µA
			SVOS4	0.08	0.33	1.90	3.11	-	
			SVOS3	0.13	0.54	2.80	4.47	6.77	

1. The parameters given in the above table for the SMPS regulator are derived by extrapolation from the LDO consumption and typical SMPS efficiency factors.

Table 45. Typical and maximum current consumption in Sleep mode, LDO regulator

Symbol	Parameter	Conditions		f_{HCLK} (MHz)	Typ	Max(1)				Unit
						Tj=25 °C	Tj=85 °C	Tj=105 °C	Tj=125 °C	
$I_{DD\ (Sleep)}$	Supply current in Sleep mode	All peripherals disabled	VOS0	480	50.7	96.3	253.4	366.1	-	mA
				400	43.4	87.8	245.5	357.9	-	
			VOS1	400	35.3	66.5	181.3	265.8	379.6	
				300	27.9	-	-	-	-	
			VOS2	300	24.6	47.3	139.1	207.3	300.4	
				200	18.8	-	-	-	-	
			VOS3	200	16.5	33.6	106.4	160.9	236.1	
		All peripherals enabled	VOS0	480	136.0	194.7	348.5	464.4	-	
				400	115.0	169.0	325.9	441.7	-	
			VOS1	400	97.7	138.2	251.3	338.4	456.4	
				300	74.9	-	-	-	-	
			VOS2	300	67.3	95.8	187.6	257.9	354.1	
				200	52.8	-	-	-	-	
			VOS3	200	47.1	69.3	141.4	197.7	275.1	

1. Guaranteed by characterization results, unless otherwise specified.

Table 46. Typical and maximum current consumption in Sleep mode, SMPS regulator(1)

Symbol	Parameter	Conditions		f_{HCLK} (MHz)	Typ	Max				Unit
						Tj=25 °C	Tj=85 °C	Tj=105 °C	Tj=125 °C	
$I_{DD\ (Sleep)}$	Supply current in Sleep mode	All peripherals disabled	VOS1	400	15.93	29.69	79.01	118.72	173.80	mA
				300	12.58	-	-	-	-	
			VOS2	300	10.21	19.63	56.46	82.14	123.46	
				200	7.89	-	-	-	-	
			VOS3	200	6.50	12.98	39.73	59.35	87.10	
		All peripherals Enabled	VOS1	400	42.65	59.62	110.88	153.00	211.65	
			VOS2	300	27.70	38.94	75.26	102.22	147.38	
			VOS3	200	17.95	26.14	52.75	72.95	104.09	

1. The parameters given in the above table for the SMPS regulator are derived by extrapolation from the LDO consumption and typical SMPS efficiency factors.

Table 47. Typical and maximum current consumption in Standby

Symbol	Parameter	Conditions		Typ				Max(1)				Unit
								3 V				
		Backup SRAM	RTC and LSE	1.62 V	2.4 V	3 V	3.3 V	Tj=25 °C	Tj=85 °C	Tj=105 °C	Tj=125 °C	
I_{DD} (Standby)	Supply current in Standby mode	OFF	OFF	1,92	1,95	2,06	2,16	4	18	40	90	µA
		ON	OFF	3,33	3,44	3,6	3,79	8.2	47	83	141	
		OFF	ON	2,43	2,57	2,77	2,95	-	-	-	-	
		ON	ON	3,82	4,05	4,31	4,55	-	-	-	-	

1. Guaranteed by characterization results, unless otherwise specified.

Table 48. Typical and maximum current consumption in V_{BAT} mode

Symbol	Parameter	Conditions		Typ				Max(1)				Unit
								3 V				
		Backup SRAM	RTC and LSE	1.2 V	2 V	3 V	3.4 V	Tj=25 °C	Tj=85 °C	Tj=105 °C	Tj=125 °C	
I_{DD} (VBAT)	Supply current in V_{BAT} mode	OFF	OFF	0,02	0,02	0,03	0,05	0,5	4,1	10	24	µA
		ON	OFF	1,33	1,45	1,58	1,7	4,4	22	48	87	
		OFF	ON	0,46	0,57	0,75	0,87	-	-	-	-	
		ON	ON	1,77	2	2,3	2,5	-	-	-	-	

1. Guaranteed by characterization results, unless otherwise specified.

Typical SMPS efficiency versus load current and temperature

Figure 17. Typical SMPS efficiency (%) vs load current (A) in Run mode at T_J = 30 °C

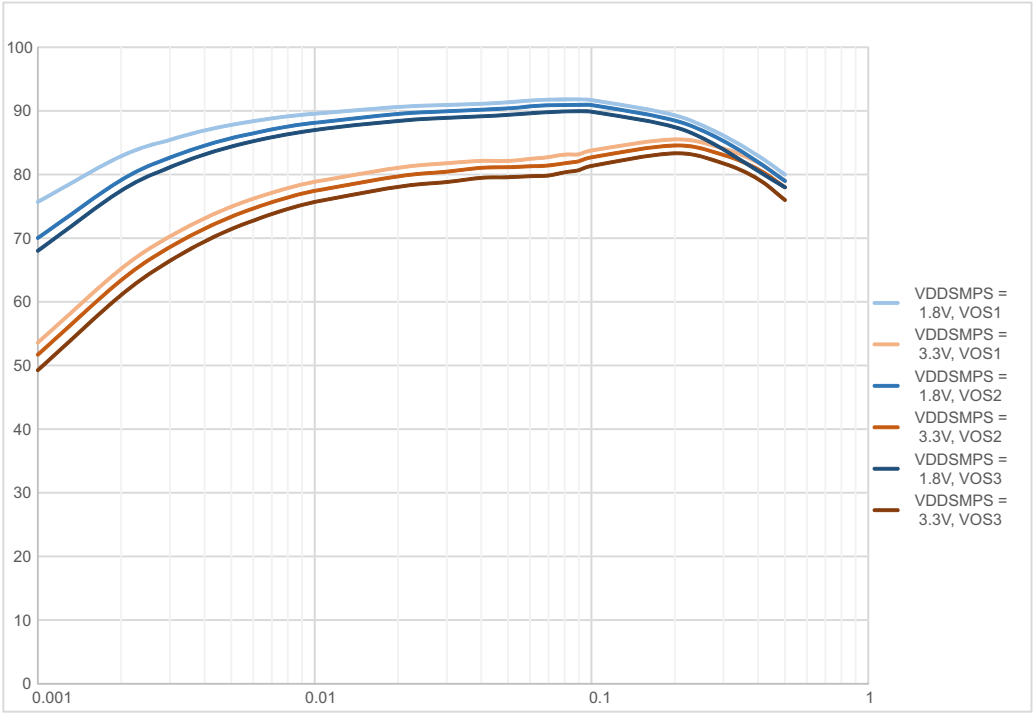

Figure 18. Typical SMPS efficiency (%) vs load current (A) in Run mode at T_J = T_{Jmax}

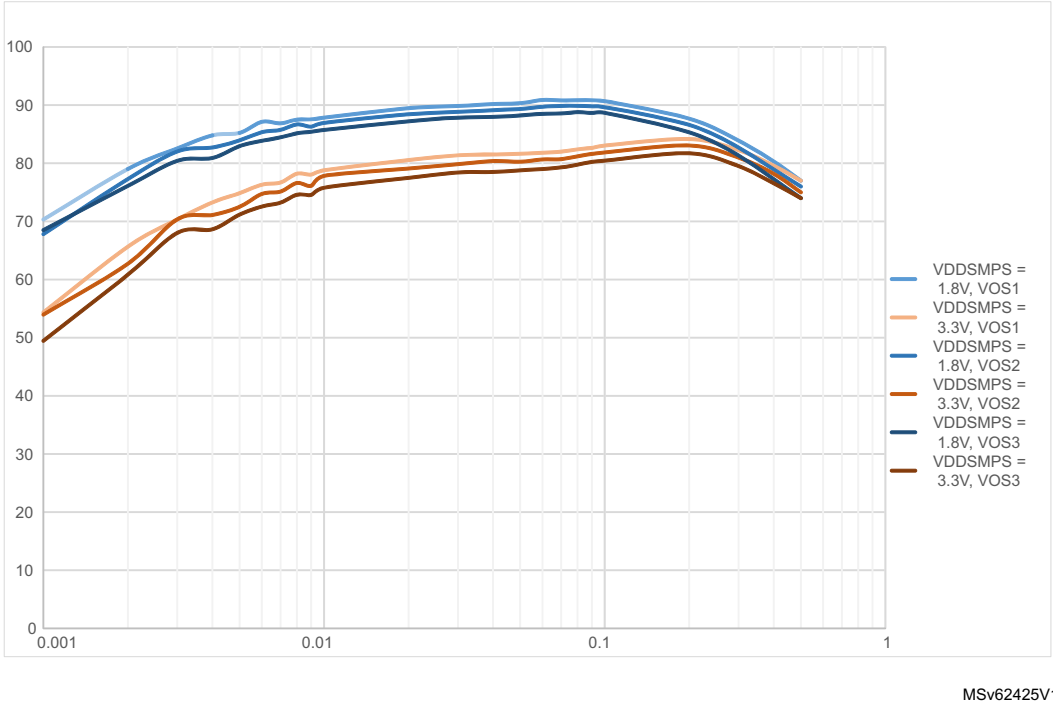

Figure 19. Typical SMPS efficiency (%) vs load current (A) in low-power mode at T_J = 30 °C

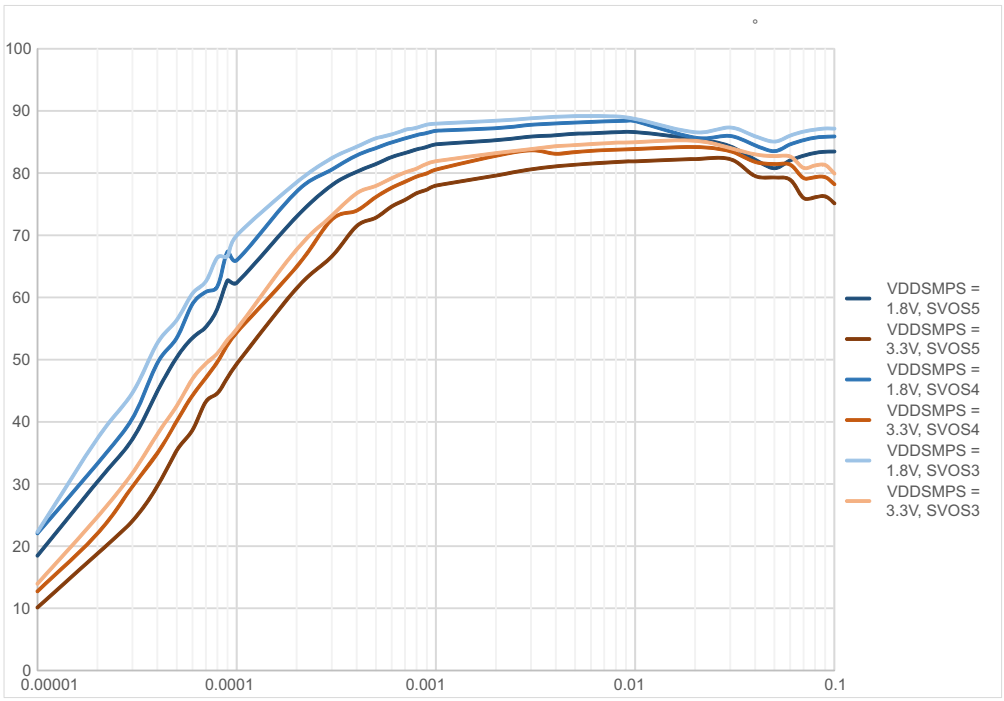

MSv62426V1

Figure 20. Typical SMPS efficiency (%) vs load current (A) in low-power mode at $T_J = T_{Jmax}$

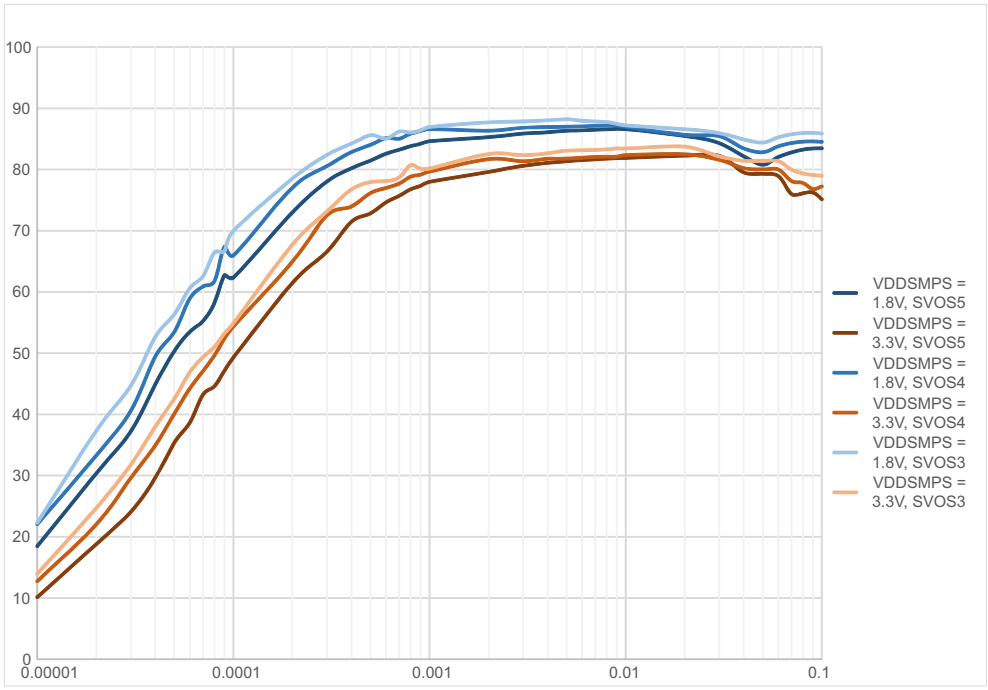

I/O system current consumption

The current consumption of the I/O system has two components: static and dynamic.

I/O static current consumption

All the I/Os used as inputs with pull-up or pull-down generate a current consumption when the pin is externally held low. The value of this current consumption can be simply computed by using the pull-up/pull-down resistors values given in *Table 72: I/O static characteristics*.

For the output pins, any internal or external pull-up or pull-down, and any external load must also be considered to estimate the current consumption.

An additional I/O current consumption is due to I/Os configured as inputs if an intermediate voltage level is externally applied. This current consumption is caused by the input Schmitt trigger circuits used to discriminate the input value. Unless this specific configuration is required by the application, this supply current consumption can be avoided by configuring these I/Os in analog mode. This is notably the case of ADC input pins which should be configured as analog inputs.

Caution: Any floating input pin can also settle to an intermediate voltage level or switch inadvertently, as a result of external electromagnetic noise. To avoid a current consumption related to floating pins, they must either be configured in analog mode, or forced internally to a definite digital value. This can be done either by using pull-up/down resistors or by configuring the pins in output mode.

I/O dynamic current consumption

In addition to the internal peripheral current consumption (see *Table 49: Peripheral current consumption in Run mode*), the I/Os used by an application also contribute to the current consumption. When an I/O pin switches, it uses the current from the MCU supply voltage to supply the I/O pin circuitry and to charge/discharge the internal or external capacitive load connected to the pin:

$$I_{SW} = V_{DDx} \times f_{SW} \times C_L$$

where

I_{SW} is the current sunk by a switching I/O to charge/discharge the capacitive load

V_{DDx} is the MCU supply voltage

f_{SW} is the I/O switching frequency

C_L is the total capacitance seen by the I/O pin: $C = C_{INT} + C_{EXT}$

The test pin is configured in push-pull output mode and is toggled by software at a fixed frequency.

On-chip peripheral current consumption

The MCU is placed under the following conditions:

- At startup, all I/O pins are in analog input configuration.
- All peripherals are disabled unless otherwise mentioned.
- The I/O compensation cell is enabled.
- $f_{rcc_c_ck}$ is the CPU clock. $f_{PCLK} = f_{rcc_c_ck}/4$, and $f_{HCLK} = f_{rcc_c_ck}/2$.
  The given value is calculated by measuring the difference of current consumption
  - with all peripherals clocked off
  - with only one peripheral clocked on
  - $f_{rcc_c_ck}$ = 480 MHz (Scale 0), $f_{rcc_c_ck}$ = 400 MHz (Scale 1), $f_{rcc_c_ck}$ = 300 MHz (Scale 2), $f_{rcc_c_ck}$ = 200 MHz (Scale 3)
- The ambient operating temperature is 25 °C and V_{DD}=3.3 V.

Table 49. Peripheral current consumption in Run mode

Bus	Peripheral	VOS0[1]	VOS1	VOS2	VOS3	Unit
AHB3	MDMA	4.6	3.8	3.4	3.2	µA/MHz
	DMA2D	2.9	2.4	2.1	1.9	
	JPGDEC	4.1	3.7	3.4	3.1	
	FLASH	17.0	15.0	14.0	12.0	
	FMC registers	0.9	1.1	0.9	0.8	
	FMC kernel	7.0	6.1	5.6	5.0	
	QUADSPI registers	1.5	1.5	1.4	1.3	
	QSPI kernel	1.0	0.9	0.8	0.7	
	SDMMC1 registers	8.2	7.2	6.7	6.0	
	SDMMC1 kernel	1.3	1.2	0.9	0.9	
	DTCM1	7.9	6.8	6.0	5.3	
	DTCM2	8.3	7.2	6.4	5.7	
	ITCM	7.0	6.3	5.6	5.1	
	D1SRAM1	13.0	11.0	9.9	8.7	
	AHB3 bridge	35.0	32.0	29.0	26.0	
	Total AHB3	**120**	**106**	**96**	**86**	
AHB1	DMA1	54.0	48.0	41.0	37.0	
	DMA2	55.0	49.0	42.0	37.0	
	ADC12 registers	4.5	4.1	3.7	3.3	
	ADC12 kernel	1.0	0.7	0.4	0.6	
	ART accelerator	4.1	3.7	3.2	2.9	
	ETH1MAC	17.0	15.0	14.0	12.0	
	ETH1TX	0.1	0.1	0.1	0.1	
	ETH1RX	0.1	0.1	0.1	0.1	
	USB1 OTG registers	23.0	21.0	19.0	17.0	
	USB1 OTG kernel	8.2	0.5	8.3	8.2	
	USB1 ULPI	0.1	0.1	0.1	0.1	
	USB2 OTG registers	21.0	19.0	17.0	15.0	
	USB2 OTG kernel	8.5	0.4	8.6	8.3	
	USB2 ULPI	23.0	19.0	20.0	19.0	
	AHB1 bridge	0.1	0.1	0.1	0.1	
	Total AHB1	**220**	**181**	**178**	**161**	

Table 49. Peripheral current consumption in Run mode (continued)

Bus	Peripheral	VOS0[(1)]	VOS1	VOS2	VOS3	Unit
AHB2	DCMI	2.1	1.9	1.8	1.6	µA/MHz
	CRYPT	0.1	0.1	0.1	0.1	
	HASH	0.1	0.1	0.1	0.1	
	RNG registers	1.7	2.0	1.3	1.2	
	RNG kernel	11.0	0.1	9.7	9.4	
	SDMMC2 registers	47.0	41.0	37.0	34.0	
	SDMMC2 kernel	1.7	1.2	1.1	1.0	
	D2SRAM1	5.7	4.9	4.4	3.9	
	D2SRAM2	5.2	4.5	4.0	3.5	
	D2SRAM3	4.1	3.6	3.2	2.8	
	AHB2 bridge	0.1	0.1	0.1	0.1	
	Total AHB2	**79**	**60**	**63**	**58**	
AHB4	GPIOA	1.5	1.3	1.3	1.1	
	GPIOB	1.2	1.0	1.0	0.9	
	GPIOC	0.8	0.7	0.7	0.6	
	GPIOD	1.1	1.0	1.0	0.9	
	GPIOE	0.7	0.7	0.7	0.6	
	GPIOF	0.8	0.8	0.7	0.6	
	GPIOG	0.9	0.8	0.8	0.7	
	GPIOH	1.1	1.0	1.0	0.9	
	GPIOI	0.9	0.9	0.8	0.7	
	GPIOJ	0.8	0.8	0.7	0.7	
	GPIOK	0.7	0.8	0.7	0.6	
	CRC	0.4	0.5	0.4	0.3	
	BDMA	6.6	5.9	5.3	4.8	
	ADC3 registers	1.7	1.5	1.2	1.2	
	ADC3 kernel	0.4	0.3	0.5	0.2	
	BKPRAM	2.3	1.9	1.7	1.5	
	AHB4 bridge	0.1	0.1	0.1	0.1	
	Total AHB4	**22**	**20**	**19**	**16**	

Table 49. Peripheral current consumption in Run mode (continued)

Bus	Peripheral	VOS0[(1)]	VOS1	VOS2	VOS3	Unit
APB3	WWDG1	0.7	0.5	0.5	0.2	µA/MHz
	LCD-TFT	81.0	36.0	33.0	30.0	
	DSI registers	4.7	4.2	4.0	3.6	
	DSI kernel	0.1	0.1	0.1	0.1	
	APB3 bridge	0.3	0.2	0.1	0.1	
	Total APB3	**87**	**41**	**38**	**34**	
APB1	TIM2	7.7	3.6	3.3	3.0	µA/MHz
	TIM3	6.7	3.2	3.0	2.7	
	TIM4	6.3	3.1	2.8	2.5	
	TIM5	7.4	3.5	3.2	2.8	
	TIM6	1.4	0.7	0.8	0.6	
	TIM7	1.4	0.7	0.7	0.6	
	TIM12	3.2	1.5	1.5	1.3	
	TIM13	2.3	1.1	1.1	0.9	
	TIM14	2.1	1.1	1.1	0.9	
	LPTIM1 registers	0.7	0.5	0.8	0.7	
	LPTIM1 kernel	2.4	2.3	1.9	1.7	
	WWDG2	0.6	0.5	0.5	0.4	
	SPI2 registers	2.0	1.8	1.7	1.4	
	SPI2 kernel	0.8	0.6	0.5	0.6	
	SPI3 registers	1.8	1.6	1.6	1.3	
	SPI3 kernel	0.7	0.9	0.7	0.7	
	SPDIFRX1 registers	0.5	0.7	0.7	0.6	
	SPDIFRX1 kernel	3.5	2.8	2.4	2.2	
	USART2 registers	1.9	1.7	1.4	1.3	
	USART2 kernel	4.3	3.9	3.6	3.2	
	USART3 registers	1.9	1.7	1.4	1.3	
	USART3 kernel	4.4	3.9	3.5	3.2	
	UART4 registers	1.7	1.5	1.4	1.4	
	UART4 kernel	3.9	3.4	3.1	2.8	
	UART5 registers	1.6	1.4	1.4	1.3	
	UART5 kernel	3.8	3.4	3.0	2.7	
	I2C1 registers	1.1	0.8	0.9	0.8	
	I2C1 kernel	2.5	2.3	2.0	1.9	
	I2C2 registers	1.0	0.8	0.9	0.8	

Table 49. Peripheral current consumption in Run mode (continued)

Bus	Peripheral	VOS0[(1)]	VOS1	VOS2	VOS3	Unit
APB1 (continued)	I2C2 kernel	2.3	2.2	1.9	1.7	μA/MHz
	I2C3 registers	0.8	1.0	0.8	0.8	
	I2C3 kernel	2.4	1.9	1.8	1.6	
	HDMI-CEC registers	0.7	0.5	0.6	0.5	
	HDMI-CEC kernel	0.1	0.1	3.2	0.1	
	DAC12	3.6	1.3	1.2	1.0	
	USART7 registers	1.8	1.8	1.6	1.4	
	USART7 kernel	4.0	3.3	3.0	2.8	
	USART8 registers	2.0	1.6	1.6	1.4	
	USART8 kernel	3.9	3.4	3.1	2.8	
	CRS	6.4	5.5	5.0	4.5	
	SWPMI registers	2.7	2.4	2.3	1.9	
	SWPMI kernel	0.1	0.1	0.1	0.1	
	OPAMP	0.2	0.3	0.3	0.2	
	MDIO	3.3	2.9	2.6	2.3	
	FDCAN registers	19.0	17.0	15.0	13.0	
	FDCAN kernel	9.1	7.9	6.9	6.4	
	APB1 bridge	0.1	0.1	0.1	0.1	
	Total APB1	**142**	**108**	**102**	**88**	
APB2	TIM1	11.0	5.0	4.5	4.0	
	TIM8	10.0	4.7	4.3	3.8	
	USART1 registers	3.6	2.5	2.7	2.9	
	USART1 kernel	0.1	0.1	0.1	0.1	
	USART6 registers	4.5	3.0	3.1	3.4	
	USART6 kernel	0.1	0.1	0.1	0.1	
	SPI1 registers	2.0	1.7	1.6	1.4	
	SPI1 kernel	0.9	0.8	0.7	0.6	
	SPI4 registers	2.1	1.7	1.6	1.5	
	SPI4 kernel	0.6	0.5	0.5	0.3	
	TIM15	5.5	2.5	2.3	2.1	
	TIM16	4.1	2.0	1.8	1.7	
	TIM17	4.1	1.9	1.8	1.6	
	SPI5 registers	2.0	1.8	1.6	1.3	
	SPI5 kernel	0.5	0.4	0.4	0.5	
	SAI1 registers	1.3	1.1	1.1	1.0	

Table 49. Peripheral current consumption in Run mode (continued)

Bus	Peripheral	VOS0[1]	VOS1	VOS2	VOS3	Unit
APB2 (continued)	SAI1 kernel	1.4	1.1	1.0	0.8	µA/MHz
	SAI2 registers	1.5	1.3	1.2	1.0	
	SAI2 kernel	1.1	1.0	0.9	0.9	
	SAI3 registers	1.6	1.3	1.1	1.0	
	SAI3 kernel	1.1	1.2	1.1	0.9	
	DFSDM1 registers	6.5	5.8	5.2	4.7	
	DFSDM1 kernel	0.3	0.2	0.2	0.4	
	HRTIM	84.0	39.0	35.0	32.0	
	APB2 bridge	0.2	0.1	0.1	0.2	
	Total APB2	**150**	**81**	**74**	**68**	
APB4	SYSCFG	0.9	1.0	0.7	0.8	
	LPUART1 registers	1.1	1.3	1.0	0.8	
	LPUART1 kernel	2.9	2.2	2.2	2.1	
	SPI6 registers	1.8	1.6	1.4	1.3	
	SPI6 kernel	0.4	0.4	0.5	0.3	
	I2C4 registers	0.9	0.7	0.7	0.4	
	I2C4 kernel	2.2	2.1	1.9	1.8	
	LPTIM2 registers	0.8	0.6	0.7	0.5	
	LPTIM2 kernel	2.3	2.1	1.8	1.4	
	LPTIM3 registers	0.7	0.7	0.7	0.4	
	LPTIM3 kernel	2.1	1.7	1.6	1.5	
	LPTIM4 registers	0.8	0.4	0.6	0.4	
	LPTIM4 kernel	2.2	2.0	1.7	1.5	
	LPTIM5 registers	0.5	0.4	0.6	0.4	
	LPTIM5 kernel	2.0	1.8	1.5	1.2	
	COMP12	0.6	0.4	0.5	0.2	
	VREF	0.4	0.2	0.2	0.1	
	RTC	1.1	0.9	1.0	0.6	
	SAI4 registers	1.7	1.4	1.3	1.0	
	SAI4 kernel	2.0	2.0	1.8	1.6	
	APB4 bridge	0.1	0.1	0.1	0.1	
	Total APB4	**28**	**24.4**	**22.4**	**18.9**	

1. VOS0 is not available for STM32H757XIH6A.

6.3.8 Wakeup time from low-power modes

The wakeup times given in *Table 50* are measured starting from the wakeup event trigger up to the first instruction executed by the CPU:

- For Stop or Sleep modes: the wakeup event is WFE.
- WKUP (PC1) pin is used to wakeup from Standby, Stop and Sleep modes.

All timings are derived from tests performed under ambient temperature and V_{DD}=3.3 V.

Table 50. Low-power mode wakeup timings(1)

Symbol	Parameter	Conditions	Typ(2)	Max(2)	Unit
$t_{WUSLEEP}$(3)	Wakeup from Sleep	-	9	10	CPU clock cycles
t_{WUSTOP}(3)	Wakeup from Stop	VOS3, HSI, flash memory in normal mode	4.4	5.6	µs
		VOS3, HSI, flash memory in low-power mode	12	15	
		VOS4, HSI, flash memory in normal mode	15	20	
		VOS4, HSI, flash memory in low-power mode	23	28	
		VOS5, HSI, flash memory in normal mode	39	71	
		VOS5, HSI, flash memory in low-power mode	39	47	
		VOS3, CSI, flash memory in normal mode	30	37	
		VOS3, CSI, flash memory in low power mode	36	50	
		VOS4, CSI, flash memory in normal mode	38	48	
		VOS4, CSI, flash memory in low-power mode	47	61	
		VOS5, CSI, flash memory in normal mode	68	75	
		VOS5, CSI, flash memory in low-power mode	68	77	
t_{WUSTOP_KERON}(3)	Wakeup from Stop, clock kept running	VOS3, HSI, flash memory in normal mode	2.6	3.4	
		VOS3, CSI, flash memory in normal mode	26	36	
$t_{WUSTDBY}$(3)	Wakeup from Standby mode	-	390	500	

1. The wakeup timings is valid for both CPUs.
2. Guaranteed by characterization results.
3. The wakeup times are measured from the wakeup event to the point in which the application code reads the first instruction.

6.3.9 External clock source characteristics

High-speed external user clock generated from an external source

In bypass mode the HSE oscillator is switched off and the input pin is a standard I/O.

The external clock signal has to respect the *Table 72: I/O static characteristics*. However, the recommended clock input waveform is shown in *Figure 21*.

Table 51. High-speed external user clock characteristics(1)

Symbol	Parameter	Min	Typ	Max	Unit
f_{HSE_ext}	User external clock source frequency	4	25	50	MHz
V_{HSEH}	Digital OSC_IN input high-level voltage	0.7 V_{DD}	-	V_{DD}	V
V_{HSEL}	Digital OSC_IN input low-level voltage	V_{SS}	-	0.3 V_{DD}	
$t_{W(HSE)}$	OSC_IN high or low time	7	-	-	ns

1. Guaranteed by design.

Figure 21. High-speed external clock source AC timing diagram

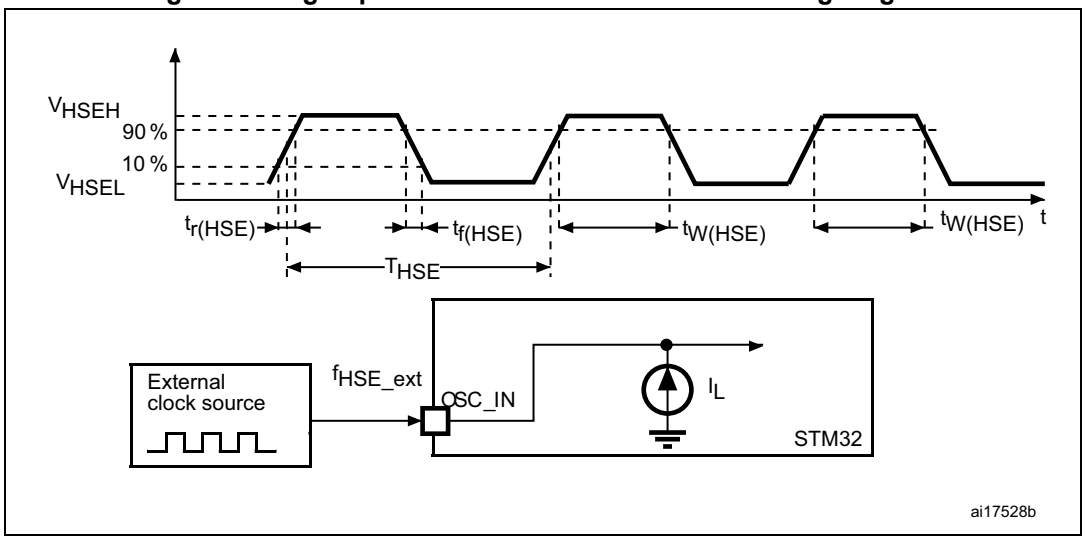

Low-speed external user clock generated from an external source

In bypass mode the LSE oscillator is switched off and the input pin is a standard I/O. The external clock signal has to respect the *Table 72: I/O static characteristics*. However, the recommended clock input waveform is shown in *Figure 22*.

Table 52. Low-speed external user clock characteristics(1)

Symbol	Parameter	Min	Typ	Max	Unit
f_{LSE_ext}	User external clock source frequency	5	32.768	40	kHz
$V_{LSE_ext_PP}$	OSC32_IN peak-to-peak amplitude	0.3	-	V_{SW}(2)	V
V_{LSE_ext}	OSC32_IN input range	0	-	V_{SW}(2)	
$t_{w(LSEH)}$ $t_{w(LSEL)}$	OSC32_IN high or low time for square signal input	10	-	-	µs

1. Specified by design. Not tested in production.
2. $V_{SW} = V_{DD}$ when $V_{DD} > V_{BOR0}$, $V_{SW} = V_{BAT}$ when $V_{DD} < V_{BOR0}$. If the customer application includes V_{BAT} mode, OSC32_IN peak-to-peak must be lower than V_{BOR0}. Otherwise, the LSE frequency is not guaranteed during switching to/from V_{BAT} mode.

Note: For information on selecting the crystal, refer to the application note AN2867 "Oscillator design guide for STM8AL/AF/S, STM32 MCUs and MPUs" available from the ST website www.st.com.

Figure 22. Low-speed external clock source AC timing diagram

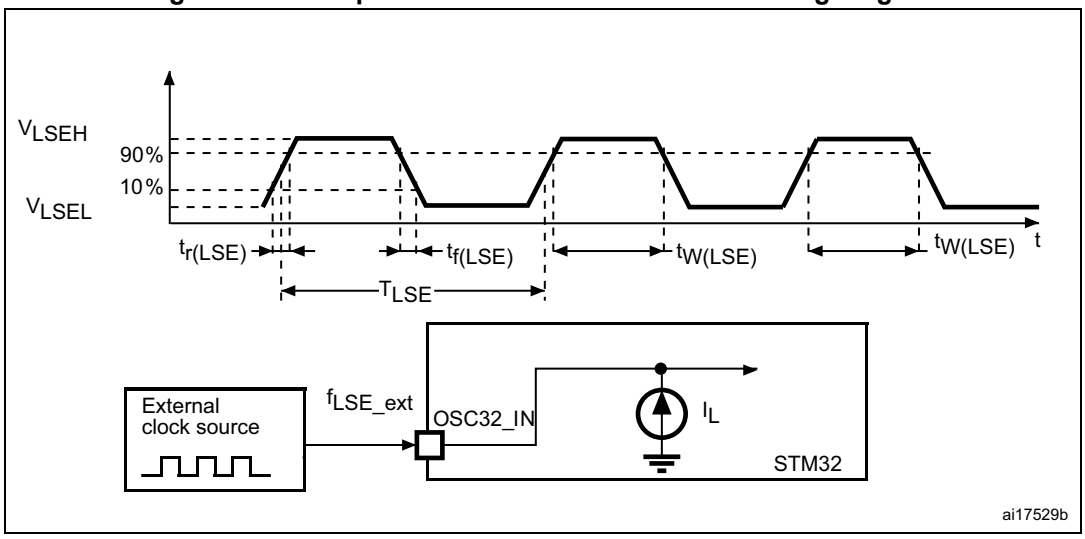

High-speed external clock generated from a crystal/ceramic resonator

The high-speed external (HSE) clock can be supplied with a 4 to 48 MHz crystal/ceramic resonator oscillator. All the information given in this paragraph are based on characterization results obtained with typical external components specified in *Table 53*. In the application, the resonator and the load capacitors have to be placed as close as possible to the oscillator pins in order to minimize output distortion and startup stabilization time. Refer to the crystal resonator manufacturer for more details on the resonator characteristics (frequency, package, accuracy).

Table 53. 4-48 MHz HSE oscillator characteristics(1)

Symbol	Parameter	Operating conditions(2)	Min	Typ	Max	Unit
F	Oscillator frequency	-	4	-	48	MHz
R_F	Feedback resistor	-	-	200	-	kΩ
$I_{DD(HSE)}$	HSE current consumption	During startup(3)	-	-	4	mA
		V_{DD}=3 V, Rm=30 Ω C_L=10pF@4MHz	-	0.35	-	
		V_{DD}=3 V, Rm=30 Ω C_L=10 pF at 8 MHz	-	0.40	-	
		V_{DD}=3 V, Rm=30 Ω C_L=10 pF at 16 MHz	-	0.45	-	
		V_{DD}=3 V, Rm=30 Ω C_L=10 pF at 32 MHz	-	0.65	-	
		V_{DD}=3 V, Rm=30 Ω C_L=10 pF at 48 MHz	-	0.95	-	
$Gm_{critmax}$	Maximum critical crystal gm	Startup	-	-	1.5	mA/V
t_{SU}(4)	Start-up time	V_{DD} is stabilized	-	2	-	ms

1. Guaranteed by design.
2. Resonator characteristics given by the crystal/ceramic resonator manufacturer.
3. This consumption level occurs during the first 2/3 of the $t_{SU(HSE)}$ startup time.
4. $t_{SU(HSE)}$ is the startup time measured from the moment it is enabled (by software) to a stabilized 8 MHz oscillation is reached. This value is measured for a standard crystal resonator and it can vary significantly with the crystal manufacturer.

For C_{L1} and C_{L2}, it is recommended to use high-quality external ceramic capacitors, designed for high-frequency applications, and selected to match the requirements of the crystal or resonator (see *Figure 23*). C_{L1} and C_{L2} are usually the same size. The crystal manufacturer typically specifies a load capacitance which is the series combination of C_{L1} and C_{L2}. The PCB and MCU pin capacitance must be included (10 pF can be used as a rough estimate of the combined pin and board capacitance) when sizing C_{L1} and C_{L2}.

Note: For information on selecting the crystal, refer to the application note AN2867 "Oscillator design guide for STM8AF/AL/S, STM32 MCUs and MPUs" available from the ST website www.st.com.

Figure 23. Typical application with an 8 MHz crystal

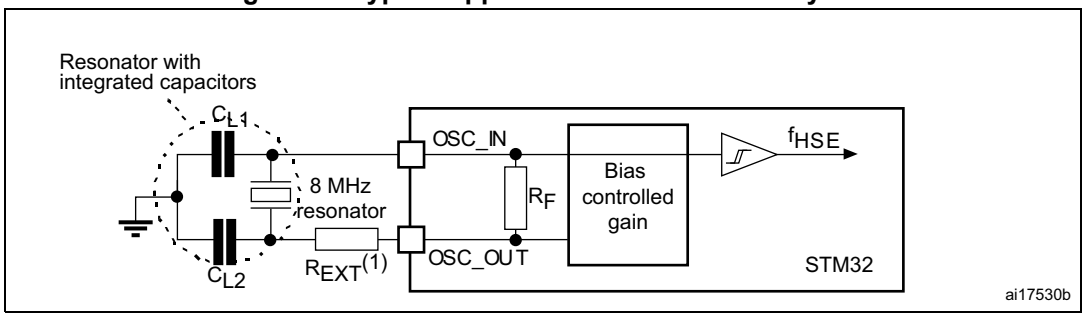

1. R_{EXT} value depends on the crystal characteristics.

Low-speed external clock generated from a crystal/ceramic resonator

The low-speed external (LSE) clock can be supplied with a 32.768 kHz crystal/ceramic resonator oscillator. All the information given in this paragraph are based on characterization results obtained with typical external components specified in *Table 54*. In the application, the resonator and the load capacitors have to be placed as close as possible to the oscillator pins in order to minimize output distortion and startup stabilization time. Refer to the crystal resonator manufacturer for more details on the resonator characteristics (frequency, package, accuracy).

Table 54. Low-speed external user clock characteristics(1)

Symbol	Parameter	Operating conditions(2)	Min	Typ	Max	Unit
F	Oscillator frequency	-	-	32.768	-	kHz
I_{DD}	LSE current consumption	LSEDRV[1:0] = 00, Low drive capability	-	290	-	nA
		LSEDRV[1:0] = 01, Medium Low drive capability	-	390	-	
		LSEDRV[1:0] = 10, Medium high drive capability	-	550	-	
		LSEDRV[1:0] = 11, High drive capability	-	900	-	
$Gm_{critmax}$	Maximum critical crystal gm	LSEDRV[1:0] = 00, Low drive capability	-	-	0.5	µA/V
		LSEDRV[1:0] = 01, Medium Low drive capability	-	-	0.75	
		LSEDRV[1:0] = 10, Medium high drive capability	-	-	1.7	
		LSEDRV[1:0] = 11, High drive capability	-	-	2.7	
t_{SU}(3)	Startup time	VDD is stabilized	-	2	-	s

1. Guaranteed by design.
2. Refer to the note and caution paragraphs below the table, and to the application note AN2867 “Oscillator design guide for STM8AL/AF/S, STM32 MCUs and MPUs”.
3. t_{SU} is the startup time measured from the moment it is enabled (by software) to a stabilized 32.768k Hz oscillation is reached. This value is measured for a standard crystal resonator and it can vary significantly with the crystal manufacturer.

Note: For information on selecting the crystal, refer to the application note AN2867 "Oscillator design guide for STM8AL/AF/S, STM32 MCUs and MPUs" available from the ST website www.st.com.

Figure 24. Typical application with a 32.768 kHz crystal

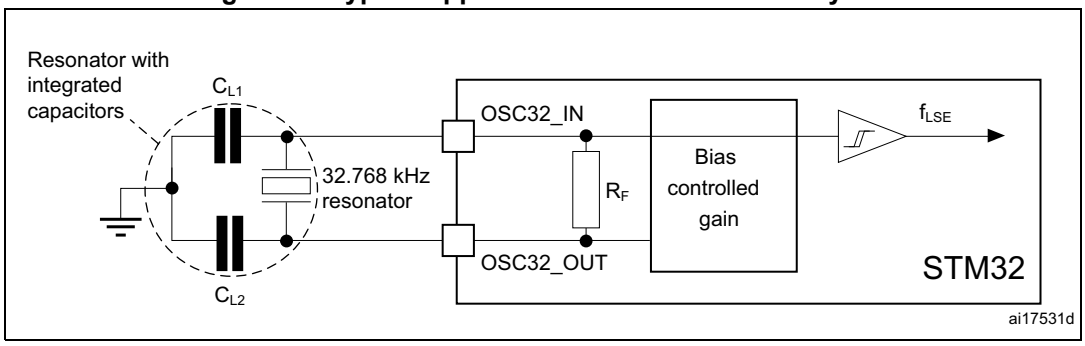

1. *An external resistor is not required between OSC32_IN and OSC32_OUT and it is forbidden to add one.*

6.3.10 Internal clock source characteristics

The parameters given in *Table 55* to *Table 58* are derived from tests performed under ambient temperature and V_{DD} supply voltage conditions summarized in *Table 23: General operating conditions*.

48 MHz high-speed internal RC oscillator (HSI48)

Table 55. HSI48 oscillator characteristics

Symbol	Parameter	Conditions	Min	Typ	Max	Unit
f_{HSI48}	HSI48 frequency	V_{DD}=3.3 V, TJ=30 °C	47.5(1)	48	48.5(1)	MHz
TRIM(2)	USER trimming step	-	-	0.175	-	%
USER TRIM COVERAGE(3)	USER TRIMMING Coverage	± 32 steps	±4.79	±5.60	-	%
DuCy(HSI48)(2)	Duty Cycle	-	45	-	55	%
ACCHSI48_REL(3)(4)	Accuracy of the HSI48 oscillator over temperature (factory calibrated)	T_J=-40 to 125 °C	–4.5	-	3.5	%
Δ_{VDD}(HSI48)(3)	HSI48 oscillator frequency drift with V_{DD}(5)	V_{DD}=3 to 3.6 V	-	0.025	0.05	%
		V_{DD}=1.62 V to 3.6 V	-	0.05	0.1	
$t_{su(HSI48)}$(2)	HSI48 oscillator start-up time	-	-	2.1	4.0	µs
$I_{DD(HSI48)}$(2)	HSI48 oscillator power consumption	-	-	350	400	µA
N_T jitter	Next transition jitter Accumulated jitter on 28 cycles(6)	-	-	± 0.15	-	ns
P_T jitter	Paired transition jitter Accumulated jitter on 56 cycles(6)	-	-	± 0.25	-	ns

1. Guaranteed by test in production.
2. Guaranteed by design.
3. Guaranteed by characterization.

4. ΔfHSI = ACCHSI48_REL + Δ_{VDD}.
5. These values are obtained by using the formula: (Freq(3.6V) - Freq(3.0V)) / Freq(3.0V) or (Freq(3.6V) - Freq(1.62V)) / Freq(1.62V).
6. Jitter measurements are performed without clock source activated in parallel.

64 MHz high-speed internal RC oscillator (HSI)

Table 56. HSI oscillator characteristics(1)

Symbol	Parameter	Conditions	Min	Typ	Max	Unit
f_{HSI}	HSI frequency	V_{DD}=3.3 V, T_J=30 °C	63.7(2)	64	64.3(2)	MHz
TRIM	HSI user trimming step	Trimming is not a multiple of 32	-	0.24	0.32	%
		Trimming is 128, 256 and 384	−5.2	−1.8	-	
		Trimming is 64, 192, 320 and 448	−1.4	−0.8	-	
		Other trimming are a multiple of 32 (not including multiple of 64 and 128)	−0.6	−0.25	-	
DuCy(HSI)	Duty Cycle	-	45	-	55	%
$\Delta_{VDD\ (HSI)}$	HSI oscillator frequency drift over V_{DD} (reference is 3.3 V)	V_{DD}=1.62 to 3.6 V	−0.12	-	0.03	%
$\Delta_{TEMP\ (HSI)}$	HSI oscillator frequency drift over temperature (reference is 64 MHz)	T_J=-20 to 105 °C	−1(3)	-	1(3)	%
		T_J=−40 to $T_J$max °C	−2(3)	-	1(3)	
t_{su}(HSI)	HSI oscillator start-up time	-	-	1.4	2	µs
t_{stab}(HSI)	HSI oscillator stabilization time	at 1% of target frequency	-	4	8	µs
I_{DD}(HSI)	HSI oscillator power consumption	-	-	300	400	µA

1. Guaranteed by design unless otherwise specified.
2. Guaranteed by test in production.
3. Guaranteed by characterization.

4 MHz low-power internal RC oscillator (CSI)

Table 57. CSI oscillator characteristics(1)

Symbol	Parameter	Conditions	Min	Typ	Max	Unit
f_{CSI}	CSI frequency	V_{DD}=3.3 V, T_J=30 °C	3.96(2)	4	4.04(2)	MHz
TRIM	Trimming step	-	-	0.35	-	%
DuCy(CSI)	Duty Cycle	-	45	-	55	%
Δ_{TEMP} (CSI)	CSI oscillator frequency drift over temperature	T_J = 0 to 85 °C	-	−3.7(3)	4.5(3)	%
		T_J = −40 to 125 °C	-	−11(3)	7.5(3)	

Table 57. CSI oscillator characteristics(1) (continued)

Symbol	Parameter	Conditions	Min	Typ	Max	Unit
D_{VDD} (CSI)	CSI oscillator frequency drift over V_{DD}	V_{DD} = 1.62 to 3.6 V	-	−0.06	0.06	%
$t_{su(CSI)}$	CSI oscillator startup time	-	-	1	2	µs
$t_{stab(CSI)}$	CSI oscillator stabilization time (to reach ±3% of f_{CSI})	-	-	-	4	cycle
$I_{DD(CSI)}$	CSI oscillator power consumption	-	-	23	30	µA

1. Guaranteed by design.
2. Guaranteed by test in production.
3. Guaranteed by characterization.

Low-speed internal (LSI) RC oscillator

Table 58. LSI oscillator characteristics

Symbol	Parameter	Conditions	Min	Typ	Max	Unit
f_{LSI}	LSI frequency	V_{DD} = 3.3 V, T_J = 25 °C	31.4(1)	32	32.6(1)	kHz
		T_J = –40 to 110 °C, V_{DD} = 1.62 to 3.6 V	29.76(2)	-	33.6(2)	
		T_J = –40 to 125 °C, V_{DD} = 1.62 to 3.6 V	29.4	-	33.6	
$t_{su(LSI)}$(3)	LSI oscillator startup time	-	-	80	130	µs
$t_{stab(LSI)}$(3)	LSI oscillator stabilization time (5% of final value)	-	-	120	170	
$I_{DD(LSI)}$(3)	LSI oscillator power consumption	-	-	130	280	nA

1. Guaranteed by test in production.
2. Guaranteed by characterization results.
3. Guaranteed by design.

6.3.11 PLL characteristics

The parameters given in *Table 59* are derived from tests performed under temperature and V_{DD} supply voltage conditions summarized in *Table 23: General operating conditions*.

Table 59. PLL characteristics (wide VCO frequency range)(1)

Symbol	Parameter	Conditions		Min	Typ	Max	Unit
f_{PLL_IN}	PLL input clock	-		2	-	16	MHz
	PLL input clock duty cycle	-		10	-	90	%
$f_{PLL_P_OUT}$	PLL multiplier output clock P	VOS0		1.5	-	480(2)	MHz
		VOS1		1.5	-	400(2)/ 480(3)	
		VOS2		1.5	-	300(2)	
		VOS3		1.5	-	200(2)	
f_{VCO_OUT}	PLL VCO output	-		192	-	960	
t_{LOCK}	PLL lock time	Normal mode		-	50(4)	150(4)	µs
		Sigma-delta mode (CKIN ≥ 8 MHz)		-	58(4)	166(4)	
Jitter	Cycle-to-cycle jitter(5)	-	VCO = 192 MHz	-	134	-	±ps
			VCO = 200 MHz	-	134	-	
			VCO = 400 MHz	-	76	-	
			VCO = 800 MHz	-	39	-	
	Long term jitter	Normal mode	VCO = 800 MHz	-	±0.7	-	%
		Sigma-delta mode (CKIN = 16 MHz)	VCO = 800 MHz	-	±0.8	-	
$I_{DD(PLL)}$(4)	PLL power consumption on V_{DD}	VCO freq = 836 MHz	V_{DDA}	-	590	1500	µA
			V_{CORE}	-	720	-	
		VCO freq = 192 MHz	V_{DDA}	-	180	600	
			V_{CORE}	-	280	-	

1. Guaranteed by design unless otherwise specified.
2. This value must be limited to the maximum frequency due to the product limitation.
3. Available for STM32H757XIH6A.
4. Guaranteed by characterization results.
5. Integer mode only.

Table 60. PLL characteristics (medium VCO frequency range)(1)

Symbol	Parameter	Conditions		Min	Typ	Max	Unit
f_{PLL_IN}	PLL input clock	-		1	-	2	MHz
	PLL input clock duty cycle	-		10	-	90	%
f_{PLL_OUT}	PLL multiplier output clock P, Q, R	VOS1		1.17	-	210	MHz
		VOS2		1.17	-	210	
		VOS3		1.17	-	200	
f_{VCO_OUT}	PLL VCO output	-		150	-	420	
t_{LOCK}	PLL lock time	Normal mode		-	60(2)	100(2)	µs
		Sigma-delta mode		forbidden			
Jitter	Cycle-to-cycle jitter(3)	-	VCO = 150 MHz	-	145	-	±ps
			VCO = 300 MHz	-	91	-	
			VCO = 400 MHz	-	64	-	
			VCO = 420 MHz	-	63	-	
	Period jitter	f_{PLL_OUT} = 50 MHz	VCO = 150 MHz	-	55	-	±-ps
			VCO = 400 MHz	-	30	-	
	Long term jitter	Normal mode	VCO = 400 MHz	-	±0.3	-	%
I(PLL)(2)	PLL power consumption on V_{DD}	VCO freq = 420MHz	VDD	-	440	1150	µA
			VCORE	-	530	-	
		VCO freq = 150MHz	VDD	-	180	500	
			VCORE	-	200	-	

1. Guaranteed by design unless otherwise specified.
2. Guaranteed by characterization results.
3. Integer mode only.

6.3.12 MIPI D-PHY characteristics

The parameters given in *Table 61* and *Table 62* are derived from tests performed under temperature and V_{DD} supply voltage conditions summarized in *Table 23: General operating conditions*.

Table 61. MIPI D-PHY characteristics(1)

Symbol	Parameter	Conditions	Min	Typ	Max	Unit
Hi-Speed Input/Output Characteristics						
U_{INST}	UI instantaneous	-	1	-	12.5	ns

Table 61. MIPI D-PHY characteristics(1) (continued)

Symbol	Parameter	Conditions	Min	Typ	Max	Unit
V_{CMTX}	HS transmit common mode voltage	-	150	200	250	mV
$\|\Delta V_{CMTX}\|$	V_{CMTX} mismatch when output is Differential-1 or Differential-0	-	-	-	5	
$\|V_{OD}\|$	HS transmit differential voltage	-	140	200	270	
$\|\Delta V_{OD}\|$	V_{OD} mismatch when output is Differential-1 or Differential-0	-	-	-	14	
V_{OHHS}	HS output high voltage	-	-	-	360	
Z_{OS}	Single ended output impedance	-	40	50	62.5	Ω
ΔZ_{OS}	Single ended output impedance mismatch	-	-	-	10	%
t_{HSr} & t_{HSf}	20%-80% rise and fall time	-	100	-	0.35*UI	ps
LP Receiver Input Characteristics						
V_{IL}	Logic 0 input voltage (not in ULP State)	-	-	-	550	mV
$V_{IL-ULPS}$	Logic 0 input voltage in ULP State	-	-	-	300	
V_{IH}	Input high level voltage	-	880	-	-	
V_{hys}	Voltage hysteresis	-	25	-	-	
LP Emitter Output Characteristics						
V_{IL}	Output low level voltage	-	1.1	1.2	1.2	V
$V_{IL-ULPS}$	Output high level voltage	-	-50	-	50	mV
V_{IH}	Output impedance of LP transmitter	-	110	-	-	Ω
V_{hys}	15%-85% rise and fall time	-	-	-	25	ns
LP Contention Detector Characteristics						
V_{ILCD}	Logic 0 contention threshold	-	-	-	200	mV
V_{IHCD}	Logic 0 contention threshold	-	450	-	-	

1. Guaranteed based on test during characterization.

Table 62. MIPI D-PHY AC characteristics LP mode and HS/LP transitions(1)

Symbol	Parameter	Conditions	Min	Typ	Max	Unit
T_{LPX}	Transmitted length of any Low-Power state period	-	50	-	-	ns
$T_{CLK-PREPARE}$	Time that the transmitter drives the Clock Lane LP-00 Line state immediately before the HS-0 Line state starting the HS transmission.	-	38	-	95	
$T_{CLK-PREPARE}$ + $T_{CLK-ZERO}$	Time that the transmitter drives the HS-0 state prior to starting the clock.	-	300	-	-	
$T_{CLK-PRE}$	Time that the HS clock shall be driven by the transmitter prior to any associated Data Lane beginning the transition from LP to HS mode.	-	8	-	-	UI
$T_{CLK-POST}$	Time that the transmitter continues to send HS clock after the last associated Data Lane has transitioned to LP Mode.	-	62+52*UI	-	-	ns
$T_{CLK-TRAIL}$	Time that the transmitter drives the HS-0 state after the last payload clock bit of an HS transmission burst.	-	60	-	-	
$T_{HS-PREPARE}$	Time that the transmitter drives the Data Lane LP-00 Line state immediately before the HS-0 Line state starting the HS transmission.	-	40+4*UI	-	85+6*UI	
$T_{HS-PREPARE}$ + $T_{HS-ZERO}$	$T_{HS-PREPARE+}$ Time that the transmitter drives the HS-0 state prior to transmitting the Sync sequence.	-	145+10*UI	-	-	
$T_{HS-TRAIL}$	Time that the transmitter drives the flipped differential state after last payload data bit of a HS transmission burst.	-	Max (n*8*UI, 60+n*4*UI)	-	-	
$T_{HS-EXIT}$	Time that the transmitter drives LP-11 following a HS burst.	-	100	-	-	
T_{REOT}	30%-85% rise time and fall time	-	-	-	35	
T_{EOT}	Transmitted time interval from the start of $T_{HS-TRAIL}$ or $T_{CLK-TRAIL}$, to the start of the LP-11 state following a HS burst.	-	-	-	105+ n*12UI	

1. Guaranteed based on test during characterization.

Figure 25. MIPI D-PHY HS/LP clock lane transition timing diagram

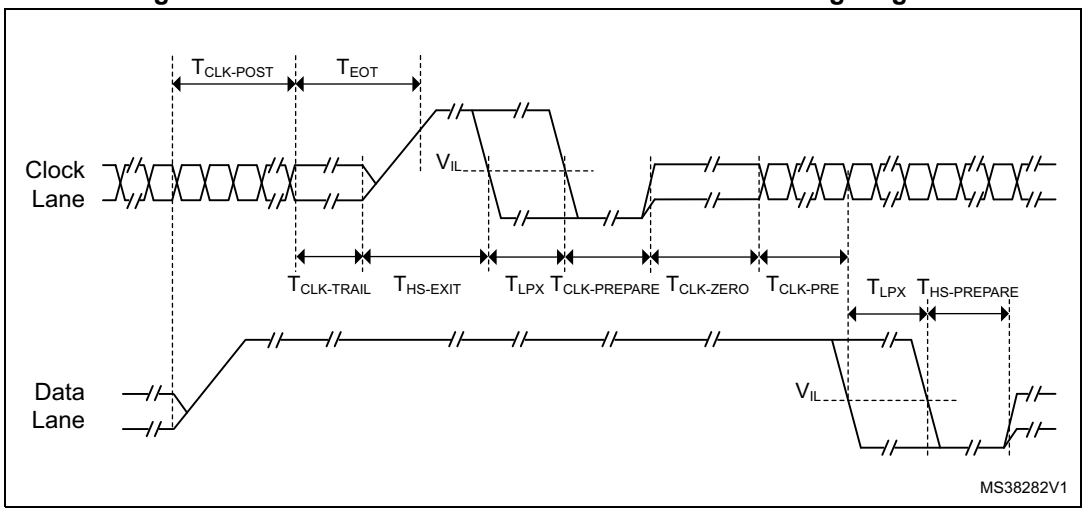

Figure 26. MIPI D-PHY HS/LP data lane transition timing diagram

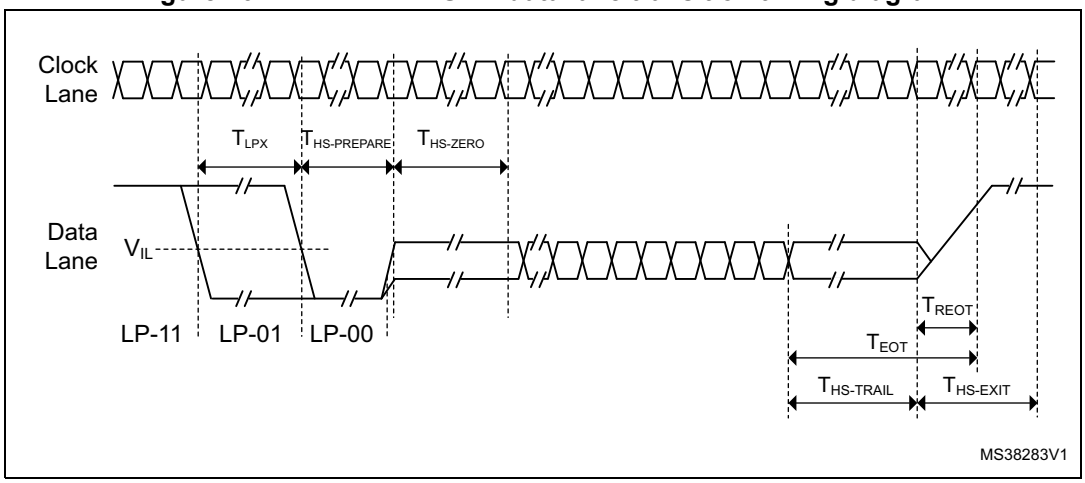

6.3.13 MIPI D-PHY regulator characteristics

The parameters given in *Table 63* are derived from tests performed under temperature and V_{DD} supply voltage conditions summarized in *Table 23: General operating conditions*.

Table 63. DSI regulator characteristics(1)

Symbol	Parameter	Conditions	Min	Typ	Max	Unit
V_{DDDSI}	Regulator output voltage on V_{DDDSI}	-	1.62	-	-	V
$V_{DD12DSI}$	1.2 V internal voltage on $V_{DD12DSI}$	-	1.15	1.20	1.26	
C_{EXT}	External capacitor on V_{CAPDSI}	-	0.5	2.2(2)	3.3	µF
ESR	External serial resistor	-	0	25	600	mΩ
I_{LOAD}	Static load current	-	-	-	50	mA
$I_{DDDSIREG}$	Regulator power consumption on V_{DDDSI}	I_{LOAD} = 0 mA	110	170	220	µA
		I_{LOAD} = 50 mA	140	200	260	

Table 63. DSI regulator characteristics(1) (continued)

Symbol	Parameter	Conditions	Min	Typ	Max	Unit
t_{WAKEUP}	Startup delay	C_{EXT} = 2.2 µF	-	80	-	µs
		C_{EXT} = 3.3 µF	-	-	160	
I_{INRUSH}	Inrush current on V_{DDDSI}	External capacitor load at start	-	60	250	mA

1. Based on test during characterization.
2. C_{EXT} recommended value is 2.2 µF to achieve a better dynamic performance of the regulator. A 1 µF capacitor can be used only if the minimum value does not drop below 0.5 µF.

6.3.14 Memory characteristics

Flash memory

The characteristics are given at T_J = –40 to 125 °C unless otherwise specified.

The devices are shipped to customers with the flash memory erased.

Table 64. Flash memory characteristics

Symbol	Parameter	Conditions	Min	Typ	Max	Unit
I_{DD}	Supply current	Write / Erase 8-bit mode	-	6.5	-	mA
		Write / Erase 16-bit mode	-	11.5	-	
		Write / Erase 32-bit mode	-	20	-	
		Write / Erase 64-bit mode	-	35	-	

Table 65. Flash memory programming

Symbol	Parameter	Conditions	Min(1)	Typ	Max(1)	Unit
t_{prog}	Word (266 bits) programming time	Program/erase parallelism x 8	-	290	580(2)	µs
		Program/erase parallelism x 16	-	180	360	
		Program/erase parallelism x 32	-	130	260	
		Program/erase parallelism x 64	-	100	200	
$t_{ERASE128KB}$	Sector (128 KB) erase time	Program/erase parallelism x 8	-	2	4	s
		Program/erase parallelism x 16	-	1.8	3.6	
		Program/erase parallelism x 32	-	1.1	2.2	
		Program/erase parallelism x 64	-	1	2	
t_{ME}	Mass erase time	Program/erase parallelism x 8	-	13	26	
		Program/erase parallelism x 16	-	8	16	
		Program/erase parallelism x 32	-	6	12	
		Program/erase parallelism x 64	-	5	10	

Table 65. Flash memory programming (continued)

Symbol	Parameter	Conditions	Min(1)	Typ	Max(1)	Unit
V_{prog}	Programming voltage	Program parallelism x 8	1.62	-	3.6	V
		Program parallelism x 16				
		Program parallelism x 32				
		Program parallelism x 64	1.8	-	3.6	

1. Guaranteed by characterization results.
2. The maximum programming time is measured after 10K erase operations.

Table 66. Flash memory endurance and data retention

Symbol	Parameter	Conditions	Value	Unit
			Min(1)	
N_{END}	Endurance	T_J = –40 to +125 °C (6 suffix versions)	10	kcycles
t_{RET}	Data retention	1 kcycle at T_A = 85 °C	30	Years
		10 kcycles at T_A = 55 °C	20	

1. Guaranteed by characterization results.

6.3.15 EMC characteristics

Susceptibility tests are performed on a sample basis during device characterization.

Functional EMS (electromagnetic susceptibility)

While a simple application is executed on the device (toggling 2 LEDs through I/O ports). the device is stressed by two electromagnetic events until a failure occurs. The failure is indicated by the LEDs:

- **Electrostatic discharge (ESD)** (positive and negative) is applied to all device pins until a functional disturbance occurs. This test is compliant with the IEC 61000-4-2 standard.
- **FTB**: A burst of fast transient voltage (positive and negative) is applied to V_{DD} and V_{SS} through a 100 pF capacitor, until a functional disturbance occurs. This test is compliant with the IEC 61000-4-4 standard.

A device reset allows normal operations to be resumed.

The test results are given in *Table 67*. They are based on the EMS levels and classes defined in application note AN1709.

Table 67. EMS characteristics

Symbol	Parameter	Conditions	Level/ Class
V_{FESD}	Voltage limits to be applied on any I/O pin to induce a functional disturbance	V_{DD} = 3.3 V, T_A = +25 °C, UFBGA240, $f_{rcc_c_ck}$ = 400 MHz, conforms to IEC 61000-4-2	3B
V_{FTB}	Fast transient voltage burst limits to be applied through 100 pF on V_{DD} and V_{SS} pins to induce a functional disturbance		5A

As a consequence, it is recommended to add a serial resistor (1 kΩ) located as close as possible to the MCU to the pins exposed to noise (connected to tracks longer than 50 mm on PCB).

Designing hardened software to avoid noise problems

EMC characterization and optimization are performed at component level with a typical application environment and simplified MCU software. It should be noted that good EMC performance is highly dependent on the user application and the software in particular.

Therefore it is recommended that the user applies EMC software optimization and prequalification tests in relation with the EMC level requested for his application.

Software recommendations

The software flowchart must include the management of runaway conditions such as:

- Corrupted program counter
- Unexpected reset
- Critical Data corruption (control registers...)

Prequalification trials

Most of the common failures (unexpected reset and program counter corruption) can be reproduced by manually forcing a low state on the NRST pin or the Oscillator pins for 1 second.

To complete these trials, ESD stress can be applied directly on the device, over the range of specification values. When unexpected behavior is detected, the software can be hardened to prevent unrecoverable errors occurring (see application note AN1015).

Electromagnetic Interference (EMI)

The electromagnetic field emitted by the device is monitored while a simple application, executing EEMBC code, is running. This emission test is compliant with SAE IEC61967-2 standard which specifies the test board and the pin loading.

Table 68. EMI characteristics for f_{HSE} = 8 MHz and f_{CPU} = 400 MHz

Symbol	Parameter	Conditions	Monitored frequency band	Value	Unit
S_{EMI}	Peak (1)	V_{DD} = 3.6 V, T_A = 25 °C, UFBGA240 package, compliant with IEC61967-2	0.1 MHz to 30 MHz	11	dBµV
			30 MHz to 130 MHz	6	
			130 MHz to 1 GHz	12	
			1 GHz to 2 GHz	7	
	Level (2)		0.1 MHz to 2 GHz	2.5	-

1. Refer to AN1709 “EMI radiated test” chapter.
2. Refer to AN1709 “EMI level classification” chapter.

6.3.16 Absolute maximum ratings (electrical sensitivity)

Based on three different tests (ESD, LU) using specific measurement methods, the device is stressed in order to determine its performance in terms of electrical sensitivity.

Electrostatic discharge (ESD)

Electrostatic discharges (a positive then a negative pulse) are applied to the pins of each sample according to each pin combination. This test conforms to the ANSI/ESDA/JEDEC JS-001 and ANSI/ESDA/JEDEC JS-002 standards.

Table 69. ESD absolute maximum ratings

Symbol	Ratings	Conditions	Packages	Class	Maximum value(1)	Unit
$V_{ESD(HBM)}$	Electrostatic discharge voltage (human body model)	T_A = +25 °C conforming to ANSI/ESDA/JEDEC JS-001	All	1C	1000	V
$V_{ESD(CDM)}$	Electrostatic discharge voltage (charge device model)	T_A = +25 °C conforming to ANSI/ESDA/JEDEC JS-002	All	C1	250	

1. Guaranteed by characterization results.

Static latchup

Two complementary static tests are required on six parts to assess the latchup performance:

- A supply overvoltage is applied to each power supply pin
- A current injection is applied to each input, output and configurable I/O pin

These tests are compliant with JESD78 IC latchup standard.

Table 70. Electrical sensitivities

Symbol	Parameter	Conditions	Class
LU	Static latchup class	T_A = +25 °C conforming to JESD78	II level A

6.3.17 I/O current injection characteristics

As a general rule, a current injection to the I/O pins, due to external voltage below V_{SS} or above V_{DD} (for standard, 3.3 V-capable I/O pins) should be avoided during the normal product operation. However, in order to give an indication of the robustness of the microcontroller in cases when an abnormal injection accidentally happens, susceptibility tests are performed on a sample basis during the device characterization.

Functional susceptibility to I/O current injection

While a simple application is executed on the device, the device is stressed by injecting current into the I/O pins programmed in floating input mode. While current is injected into the I/O pin, one at a time, the device is checked for functional failures.

The failure is indicated by an out of range parameter: ADC error above a certain limit (higher than 5 LSB TUE), out of conventional limits of induced leakage current on adjacent pins (out of –5 µA/+0 µA range), or other functional failure (for example reset, oscillator frequency deviation).

The following tables are the compilation of the SIC1/SIC2 and functional ESD results.

Negative induced A negative induced leakage current is caused by negative injection and positive induced leakage current by positive injection.

Table 71. I/O current injection susceptibility(1)

Symbol	Description	Functional susceptibility		Unit
		Negative injection	Positive injection	
I_{INJ}	PA7, PC5, PG1, PB14, PJ7, PA11, PA12, PA13, PA14, PA15, PJ12, PB4	5	0	mA
	PA2, PH2, PH3, PE8, PA6, PA7, PC4, PE7, PE10, PE11	0	NA	
	PA0, PA_C, PA1, PA1_C, PC2, PC2_C, PC3, PC3_C, PA4, PA5, PH4, PH5, BOOT0	0	0	
	All other I/Os	5	NA	

1. Guaranteed by characterization.

6.3.18 I/O port characteristics

General input/output characteristics

Unless otherwise specified, the parameters given in *Table 72: I/O static characteristics* are derived from tests performed under the conditions summarized in *Table 23: General operating conditions*. All I/Os are CMOS and TTL compliant (except for BOOT0).

For information on GPIO configuration, refer to the application note AN4899 “STM32 GPIO configuration for hardware settings and low-power consumption” available from the ST website www.st.com.

Table 72. I/O static characteristics

Symbol	Parameter	Condition	Min	Typ	Max	Unit
V_{IL}	I/O input low level voltage except BOOT0	1.62 V<V_{DDIOx}<3.6 V	-	-	$0.3V_{DD}$(1)	V
	I/O input low level voltage except BOOT0		-	-	$0.4V_{DD}-0.1$(2)	
	BOOT0 I/O input low level voltage		-	-	$0.19V_{DD}+0.1$(2)	
V_{IH}	I/O input high level voltage except BOOT0	1.62 V<V_{DDIOx}<3.6 V	$0.7V_{DD}$(1)	-	-	V
	I/O input high level voltage except BOOT0(3)		$0.47V_{DD}+0.25$(2)	-	-	
	BOOT0 I/O input high level voltage(3)		$0.17V_{DD}+0.6$(2)	-	-	
V_{HYS}(2)	TT_xx, FT_xxx and NRST I/O input hysteresis	1.62 V< V_{DDIOx} <3.6 V	-	250	-	mV
	BOOT0 I/O input hysteresis		-	200	-	
I_{lkg}(4)	FT_xx Input leakage current(2)	0< V_{IN} ≤ Max(V_{DDXXX})(9)	-	-	+/-250	nA
		Max(V_{DDXXX}) < V_{IN} ≤ 5.5 V (5)(6)(9)	-	-	1500	
	FT_u IO	0< V_{IN} ≤ Max(V_{DDXXX})(9)	-	-	+/- 350	
		Max(V_{DDXXX}) < V_{IN} ≤ 5.5 V (5)(6)(9)	-	-	5000(7)	
	TT_xx Input leakage current	0< V_{IN} ≤ Max(V_{DDXXX}) (9)	-	-	+/-250	
	VPP (BOOT0 alternate function)	0< V_{IN} ≤ V_{DDIOX}	-	-	15	
		V_{DDIOX} < V_{IN} ≤ 9 V			35	
R_{PU}	Weak pull-up equivalent resistor(8)	V_{IN}=V_{SS}	30	40	50	kΩ
R_{PD}	Weak pull-down equivalent resistor(8)	V_{IN}=V_{DD}(9)	30	40	50	
C_{IO}	I/O pin capacitance	-	-	5	-	pF

1. Compliant with CMOS requirements.
2. Guaranteed by design.

3. V_{DDIOx} represents V_{DDIO1}, V_{DDIO2} or V_{DDIO3}. V_{DDIOx}= V_{DD}.
4. This parameter represents the pad leakage of the I/O itself. The total product pad leakage is provided by the following formula: $I_{Total_Ikg_max}$ = 10 µA + [number of I/Os where V_{IN} is applied on the pad] x $I_{Ikg(Max)}$.
5. All FT_xx IO except FT_lu, FT_u and PC3.
6. V_{IN} must be less than Max(VDDXXX) + 3.6 V.
7. To sustain a voltage higher than MIN(V_{DD}, V_{DDA}, $V_{DD33USB}$) +0.3 V, the internal pull-up and pull-down resistors must be disabled.
8. The pull-up and pull-down resistors are designed with a true resistance in series with a switchable PMOS/NMOS. This PMOS/NMOS contribution to the series resistance is minimal (~10% order).
9. Max(VDDXXX) is the maximum value of all the I/O supplies.

All I/Os are CMOS and TTL compliant (no software configuration required). Their characteristics cover more than the strict CMOS-technology or TTL parameters. The coverage of these requirements for FT I/Os is shown in *Figure 27*.

Figure 27. V_{IL}/V_{IH} for all I/Os except BOOT0

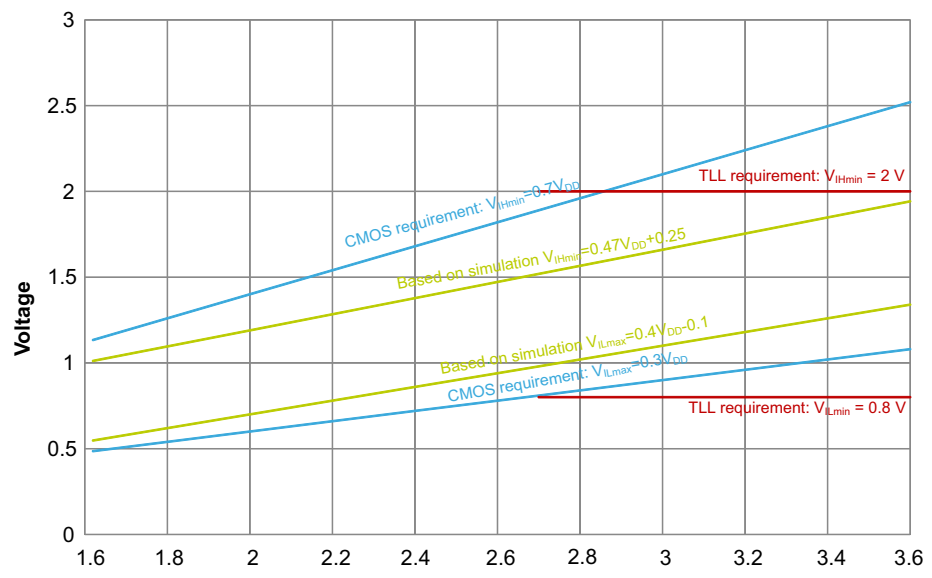

Output driving current

The GPIOs (general purpose input/outputs) can sink or source up to ±8 mA, and sink or source up to ±20 mA (with a relaxed V_{OL}/V_{OH}).

In the user application, the number of I/O pins which can drive current must be limited to respect the absolute maximum rating specified in *Section 6.2*. In particular:

- The sum of the currents sourced by all the I/Os on $V_{DD,}$ plus the maximum Run consumption of the MCU sourced on $V_{DD,}$ cannot exceed the absolute maximum rating ΣI_{VDD} (see *Table 21*).
- The sum of the currents sunk by all the I/Os on V_{SS} plus the maximum Run consumption of the MCU sunk on V_{SS} cannot exceed the absolute maximum rating ΣI_{VSS} (see *Table 21*).

Output voltage levels

Unless otherwise specified, the parameters given in *Table 73: Output voltage characteristics for all I/Os except PC13, PC14, PC15 and PI8* and *Table 74: Output voltage characteristics for PC13, PC14, PC15 and PI8* are derived from tests performed under ambient temperature and V_{DD} supply voltage conditions summarized in *Table 23: General operating conditions*. All I/Os are CMOS and TTL compliant.

Table 73. Output voltage characteristics for all I/Os except PC13, PC14, PC15 and PI8(1)

Symbol	Parameter	Conditions(3)	Min	Max	Unit
V_{OL}	Output low level voltage	CMOS port(2) I_{IO}=8 mA 2.7 V≤ V_{DD} ≤3.6 V	-	0.4	V
V_{OH}	Output high level voltage	CMOS port(2) I_{IO}=-8 mA 2.7 V≤ V_{DD} ≤3.6 V	V_{DD}−0.4	-	
V_{OL}(3)	Output low level voltage	TTL port(2) I_{IO}=8 mA 2.7 V≤ V_{DD} ≤3.6 V	-	0.4	
V_{OH}(3)	Output high level voltage	TTL port(2) I_{IO}=-8 mA 2.7 V≤ V_{DD} ≤3.6 V	2.4	-	
V_{OL}(3)	Output low level voltage	I_{IO}=20 mA 2.7 V≤ V_{DD} ≤3.6 V	-	1.3	
V_{OH}(3)	Output high level voltage	I_{IO}=-20 mA 2.7 V≤ V_{DD} ≤3.6 V	V_{DD}−1.3	-	
V_{OL}(3)	Output low level voltage	I_{IO}=4 mA 1.62 V≤ V_{DD} ≤3.6 V	-	0.4	
V_{OH} (3)	Output high level voltage	I_{IO}=-4 mA 1.62 V≤V_{DD}<3.6 V	V_{DD}−-0.4	-	
V_{OLFM+}(3)	Output low level voltage for an FTf I/O pin in FM+ mode	I_{IO}= 20 mA 2.3 V≤ V_{DD}≤3.6 V	-	0.4	
		I_{IO}= 10 mA 1.62 V≤ V_{DD} ≤3.6 V	-	0.4	

1. The IIO current sourced or sunk by the device must always respect the absolute maximum rating specified in *Table 20: Voltage characteristics*, and the sum of the currents sourced or sunk by all the I/Os (I/O ports and control pins) must always respect the absolute maximum ratings ΣIIO.
2. TTL and CMOS outputs are compatible with JEDEC standards JESD36 and JESD52.
3. Guaranteed by design.

Table 74. Output voltage characteristics for PC13, PC14, PC15 and PI8(1)

Symbol	Parameter	Conditions(3)	Min	Max	Unit
V_{OL}	Output low level voltage	CMOS port(2) I_{IO}=3 mA 2.7 V≤ V_{DD} ≤3.6 V	-	0.4	V
V_{OH}	Output high level voltage	CMOS port(2) I_{IO}=-3 mA 2.7 V≤ V_{DD} ≤3.6 V	V_{DD}−0.4	-	
V_{OL}(3)	Output low level voltage	TTL port(2) I_{IO}=3 mA 2.7 V≤ V_{DD} ≤3.6 V	-	0.4	
V_{OH}(2)	Output high level voltage	TTL port(2) I_{IO}=-3 mA 2.7 V≤ V_{DD} ≤3.6 V	2.4	-	
V_{OL}(2)	Output low level voltage	I_{IO}=1.5 mA 1.62 V≤ V_{DD} ≤3.6 V	-	0.4	
V_{OH}(2)	Output high level voltage	I_{IO}=-1.5 mA 1.62 V≤ V_{DD} ≤3.6 V	V_{DD}−0.4	-	

1. The IIO current sourced or sunk by the device must always respect the absolute maximum rating specified in *Table 20: Voltage characteristics*, and the sum of the currents sourced or sunk by all the I/Os (I/O ports and control pins) must always respect the absolute maximum ratings ΣIIO.
2. TTL and CMOS outputs are compatible with JEDEC standards JESD36 and JESD52.
3. Guaranteed by design.

Output buffer timing characteristics (HSLV option disabled)

The HSLV bit of SYSCFG_CCCSR register can be used to optimize the I/O speed when the product voltage is below 2.7 V.

Table 75. Output timing characteristics (HSLV OFF)(1)(2)

Speed	Symbol	Parameter	conditions	Min	Max	Unit
00	F_{max}(3)	Maximum frequency	C=50 pF, 2.7 V≤ V_{DD}≤3.6 V	-	12	MHz
			C=50 pF, 1.62 V≤V_{DD}≤2.7 V	-	3	
			C=30 pF, 2.7 V≤V_{DD}≤3.6 V	-	12	
			C=30 pF, 1.62 V≤V_{DD}≤2.7 V	-	3	
			C=10 pF, 2.7 V≤V_{DD}≤3.6 V	-	16	
			C=10 pF, 1.62 V≤V_{DD}≤2.7 V	-	4	
	t_r/t_f(4)	Output high to low level fall time and output low to high level rise time	C=50 pF, 2.7 V≤ V_{DD}≤3.6 V	-	16.6	ns
			C=50 pF, 1.62 V≤V_{DD}≤2.7 V	-	33.3	
			C=30 pF, 2.7 V≤V_{DD}≤3.6 V	-	13.3	
			C=30 pF, 1.62 V≤V_{DD}≤2.7 V	-	25	
			C=10 pF, 2.7 V≤V_{DD}≤3.6 V	-	10	
			C=10 pF, 1.62 V≤V_{DD}≤2.7 V	-	20	
01	F_{max}(3)	Maximum frequency	C=50 pF, 2.7 V≤ V_{DD}≤3.6 V	-	60	MHz
			C=50 pF, 1.62 V≤V_{DD}≤2.7 V	-	15	
			C=30 pF, 2.7 V≤V_{DD}≤3.6 V	-	80	
			C=30 pF, 1.62 V≤V_{DD}≤2.7 V	-	15	
			C=10 pF, 2.7 V≤V_{DD}≤3.6 V	-	110	
			C=10 pF, 1.62 V≤V_{DD}≤2.7 V	-	20	
	t_r/t_f(4)	Output high to low level fall time and output low to high level rise time	C=50 pF, 2.7 V≤ V_{DD}≤3.6 V	-	5.2	ns
			C=50 pF, 1.62 V≤V_{DD}≤2.7 V	-	10	
			C=30 pF, 2.7 V≤V_{DD}≤3.6 V	-	4.2	
			C=30 pF, 1.62 V≤V_{DD}≤2.7 V	-	7.5	
			C=10 pF, 2.7 V≤V_{DD}≤3.6 V	-	2.8	
			C=10 pF, 1.62 V≤V_{DD}≤2.7 V	-	5.2	

Table 75. Output timing characteristics (HSLV OFF)(1)(2) (continued)

Speed	Symbol	Parameter	conditions	Min	Max	Unit
10	F_{max}(3)	Maximum frequency	C=50 pF, 2.7 V≤V_{DD}≤3.6 V(5)	-	85	MHz
			C=50 pF, 1.62 V≤V_{DD}≤2.7 V(5)	-	35	
			C=30 pF, 2.7 V≤V_{DD}≤3.6 V(5)	-	110	
			C=30 pF, 1.62 V≤V_{DD}≤2.7 V(5)	-	40	
			C=10 pF, 2.7 V≤V_{DD}≤3.6 V(5)	-	166	
			C=10 pF, 1.62 V≤V_{DD}≤2.7 V(5)	-	85	
	t_r/t_f(4)	Output high to low level fall time and output low to high level rise time	C=50 pF, 2.7 V≤V_{DD}≤3.6 V(5)	-	3.8	ns
			C=50 pF, 1.62 V≤V_{DD}≤2.7 V(5)	-	6.9	
			C=30 pF, 2.7 V≤V_{DD}≤3.6 V(5)	-	2.8	
			C=30 pF, 1.62 V≤V_{DD}≤2.7 V(5)	-	5.2	
			C=10 pF, 2.7 V≤V_{DD}≤3.6 V(5)	-	1.8	
			C=10 pF, 1.62 V≤V_{DD}≤2.7 V^{v}	-	3.3	
11	F_{max}(3)	Maximum frequency	C=50 pF, 2.7 V≤V_{DD}≤3.6 V^{v}	-	100	MHz
			C=50 pF, 1.62 V≤V_{DD}≤2.7 V(5)	-	50	
			C=30 pF, 2.7 V≤V_{DD}≤3.6 V^{v}	-	133	
			C=30 pF, 1.62 V≤V_{DD}≤2.7 V(5)	-	66	
			C=10 pF, 2.7 V≤V_{DD}≤3.6 V(5)	-	220	
			C=10 pF, 1.62 V≤V_{DD}≤2.7 V(5)	-	100	
	t_r/t_f(4)	Output high to low level fall time and output low to high level rise time	C=50 pF, 2.7 V≤V_{DD}≤3.6 V(5)	-	3.3	ns
			C=50 pF, 1.62 V≤V_{DD}≤2.7 V(5)	-	6.6	
			C=30 pF, 2.7 V≤V_{DD}≤3.6 V(5)	-	2.4	
			C=30 pF, 1.62 V≤V_{DD}≤2.7 V(5)	-	4.5	
			C=10 pF, 2.7 V≤V_{DD}≤3.6 V(5)	-	1.5	
			C=10 pF, 1.62 V≤V_{DD}≤2.7 V(5)	-	2.7	

1. Guaranteed by design.
2. The frequency of the GPIOs that can be supplied in V_{BAT} mode (PC13, PC14, PC15 and PI8) is limited to 2 MHz
3. The maximum frequency is defined with the following conditions:
   (t_r+t_f) ≤ 2/3 T
   Skew ≤ 1/20 T
   45%<Duty cycle<55%
4. The fall and rise times are defined between 90% and 10% and between 10% and 90% of the output waveform, respectively.
5. Compensation system enabled.

Output buffer timing characteristics (HSLV option enabled)

Table 76. Output timing characteristics (HSLV ON)(1)

Speed	Symbol	Parameter	conditions	Min	Max	Unit
00	F_{max}(2)	Maximum frequency	C=50 pF, 1.62 V≤V_{DD}≤2.7 V	-	10	MHz
			C=30 pF, 1.62 V≤V_{DD}≤2.7 V	-	10	
			C=10 pF, 1.62 V≤V_{DD}≤2.7 V	-	10	
	t_r/t_f(3)	Output high to low level fall time and output low to high level rise time	C=50 pF, 1.62 V≤V_{DD}≤2.7 V	-	11	ns
			C=30 pF, 1.62 V≤V_{DD}≤2.7 V	-	9	
			C=10 pF, 1.62 V≤V_{DD}≤2.7 V	-	6.6	
01	F_{max}(2)	Maximum frequency	C=50 pF, 1.62 V≤V_{DD}≤2.7 V	-	50	MHz
			C=30 pF, 1.62 V≤V_{DD}≤2.7 V	-	58	
			C=10 pF, 1.62 V≤V_{DD}≤2.7 V	-	66	
	t_r/t_f(3)	Output high to low level fall time and output low to high level rise time	C=50 pF, 1.62 V≤V_{DD}≤2.7 V	-	6.6	ns
			C=30 pF, 1.62 V≤V_{DD}≤2.7 V	-	4.8	
			C=10 pF, 1.62 V≤V_{DD}≤2.7 V	-	3	
10	F_{max}(2)	Maximum frequency	C=50 pF, 1.62 V≤V_{DD}≤2.7 V(4)	-	55	MHz
			C=30 pF, 1.62 V≤V_{DD}≤2.7 V(4)	-	80	
			C=10 pF, 1.62 V≤V_{DD}≤2.7 V(4)	-	133	
	t_r/t_f(3)	Output high to low level fall time and output low to high level rise time	C=50 pF, 1.62 V≤V_{DD}≤2.7 V(4)	-	5.8	ns
			C=30 pF, 1.62 V≤V_{DD}≤2.7 V(4)	-	4	
			C=10 pF, 1.62 V≤V_{DD}≤2.7 V(4)	-	2.4	
11	F_{max}(2)	Maximum frequency	C=50 pF, 1.62 V≤V_{DD}≤2.7 V(4)	-	60	MHz
			C=30 pF, 1.62 V≤V_{DD}≤2.7 V(4)	-	90	
			C=10 pF, 1.62 V≤V_{DD}≤2.7 V(4)	-	175	
	t_r/t_f(3)	Output high to low level fall time and output low to high level rise time	C=50 pF, 1.62 V≤V_{DD}≤2.7 V(4)	-	5.3	ns
			C=30 pF, 1.62 V≤V_{DD}≤2.7 V(4)	-	3.6	
			C=10 pF, 1.62 V≤V_{DD}≤2.7 V(4)	-	1.9	

1. Guaranteed by design.
2. The maximum frequency is defined with the following conditions:
   (t_r+t_f) ≤ 2/3 T
   Skew ≤ 1/20 T
   45%<Duty cycle<55%
3. The fall and rise times are defined between 90% and 10% and between 10% and 90% of the output waveform, respectively.
4. Compensation system enabled.

6.3.19 NRST pin characteristics

The NRST pin input driver uses CMOS technology. It is connected to a permanent pull-up resistor, R_{PU} (see *Table 72: I/O static characteristics*).

Unless otherwise specified, the parameters given in *Table 77* are derived from tests performed under the ambient temperature and V_{DD} supply voltage conditions summarized in *Table 23: General operating conditions*.

Table 77. NRST pin characteristics

Symbol	Parameter	Conditions	Min	Typ	Max	Unit
R_{PU}(2)	Weak pull-up equivalent resistor(1)	$V_{IN} = V_{SS}$	30	40	50	kΩ
$V_{F(NRST)}$(2)	NRST Input filtered pulse	1.71 V < V_{DD} < 3.6 V	-	-	50	ns
$V_{NF(NRST)}$(2)	NRST Input not filtered pulse	1.71 V < V_{DD} < 3.6 V	300	-	-	
		1.62 V < V_{DD} < 3.6 V	1000	-	-	

1. The pull-up is designed with a true resistance in series with a switchable PMOS. This PMOS contribution to the series resistance must be minimum (~10% order).
2. Guaranteed by design.

Figure 28. Recommended NRST pin protection

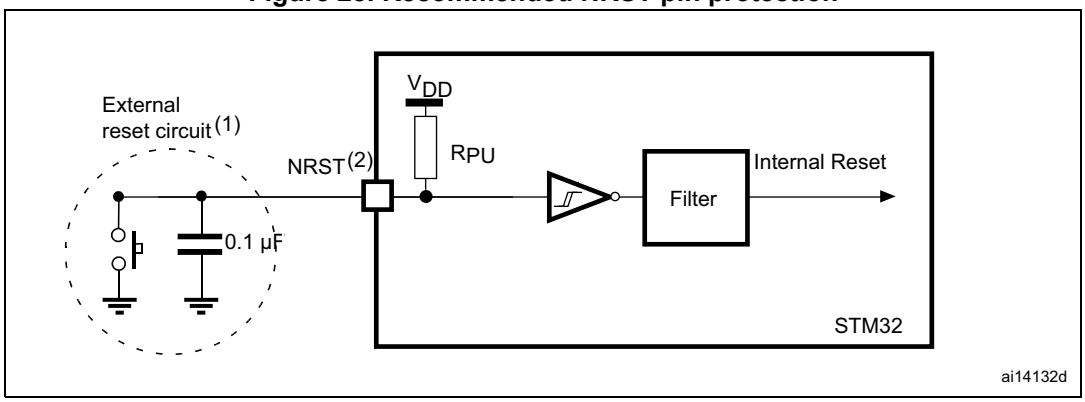

1. The reset network protects the device against parasitic resets.
2. The user must ensure that the level on the NRST pin can go below the $V_{IL(NRST)}$ max level specified in *Table 72*. Otherwise the reset is not taken into account by the device.

6.3.20 FMC characteristics

Unless otherwise specified, the parameters given in *Table 78* to *Table 91* for the FMC interface are derived from tests performed under the ambient temperature, f_{HCLK} frequency and V_{DD} supply voltage conditions summarized in *Table 23: General operating conditions*, with the following configuration:

- Output speed is set to OSPEEDRy[1:0] = 11
- Measurement points are done at CMOS levels: $0.5V_{DD}$
- IO Compensation cell activated.
- HSLV activated when $V_{DD} \leq 2.7$ V
- VOS level set to VOS1.

Refer to *Section 6.3.18: I/O port characteristics* for more details on the input/output alternate function characteristics.

Asynchronous waveforms and timings

Figure 29 through *Figure 31* represent asynchronous waveforms and *Table 78* through *Table 85* provide the corresponding timings. The results shown in these tables are obtained with the following FMC configuration:

- AddressSetupTime = 0x1
- AddressHoldTime = 0x1
- DataSetupTime = 0x1 (except for asynchronous NWAIT mode , DataSetupTime = 0x5)
- BusTurnAroundDuration = 0x0
- Capacitive load C_L = 30 pF

In all timing tables, the T_{KERCK} is the $f_{mc_ker_ck}$ clock period.

Figure 29. Asynchronous non-multiplexed SRAM/PSRAM/NOR read waveforms

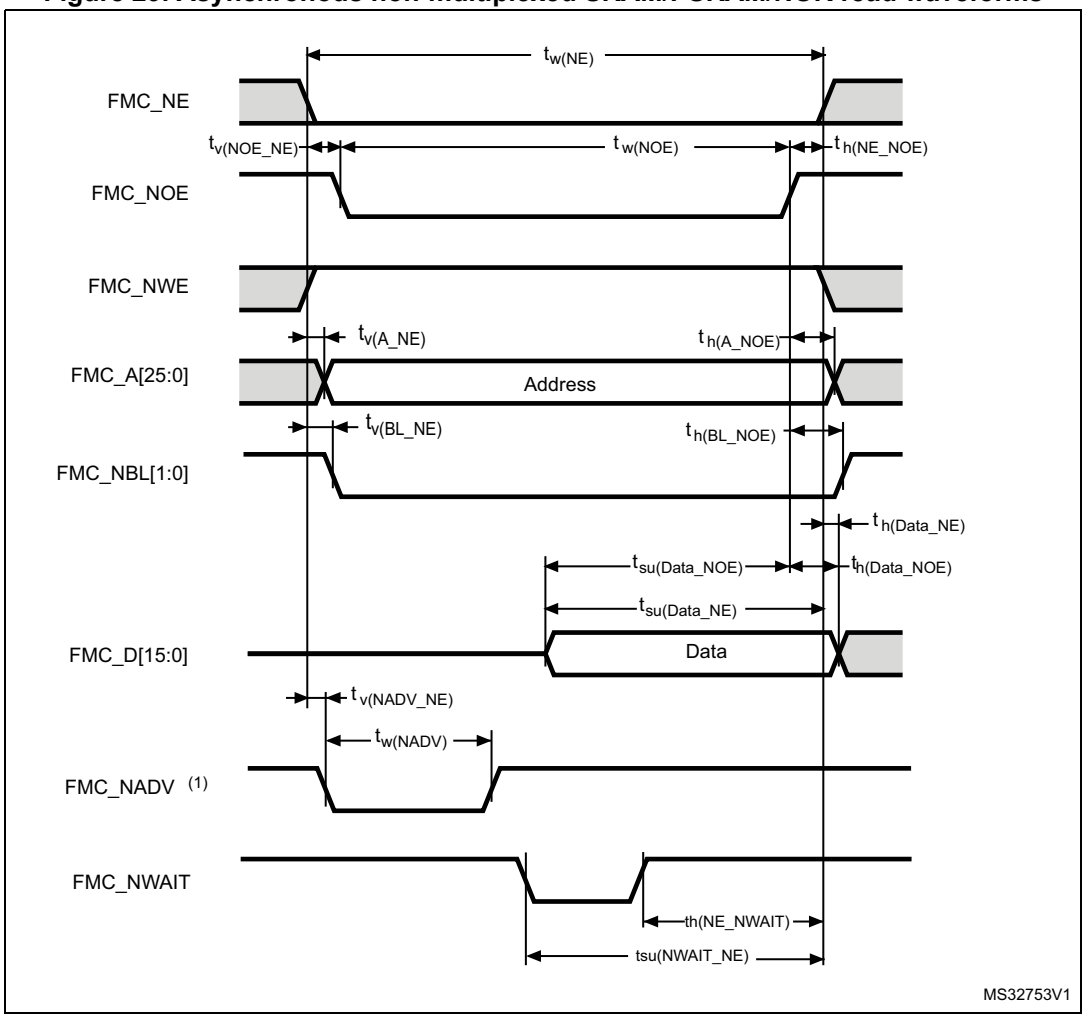

1. Mode 2/B, C and D only. In Mode 1, FMC_NADV is not used.

Table 78. Asynchronous non-multiplexed SRAM/PSRAM/NOR read timings(1)

Symbol	Parameter	Min	Max	Unit
$t_{w(NE)}$	FMC_NE low time	$3T_{fmc_ker_ck}-1$	$3T_{fmc_ker_ck}+1$	ns
$t_{v(NOE_NE)}$	FMC_NEx low to FMC_NOE low	0	0.5	
$t_{w(NOE)}$	FMC_NOE low time	$2T_{fmc_ker_ck}-1$	$2T_{fmc_ker_ck}+1$	
$t_{h(NE_NOE)}$	FMC_NOE high to FMC_NE high hold time	0	-	
$t_{v(A_NE)}$	FMC_NEx low to FMC_A valid	-	0.5	
$t_{h(A_NOE)}$	Address hold time after FMC_NOE high	0	-	
$t_{su(Data_NE)}$	Data to FMC_NEx high setup time	11	-	
$t_{su(Data_NOE)}$	Data to FMC_NOEx high setup time	11	-	
$t_{h(Data_NOE)}$	Data hold time after FMC_NOE high	0	-	
$t_{h(Data_NE)}$	Data hold time after FMC_NEx high	0	-	
$t_{v(NADV_NE)}$	FMC_NEx low to FMC_NADV low	-	0	
$t_{w(NADV)}$	FMC_NADV low time	-	$T_{fmc_ker_ck}+1$	

1. Guaranteed by characterization results.

Table 79. Asynchronous non-multiplexed SRAM/PSRAM/NOR read-NWAIT timings(1)(2)

Symbol	Parameter	Min	Max	Unit
$t_{w(NE)}$	FMC_NE low time	$7T_{fmc_ker_ck}+1$	$7T_{fmc_ker_ck}+1$	ns
$t_{w(NOE)}$	FMC_NOE low time	$5T_{fmc_ker_ck}-1$	$5T_{fmc_ker_ck}+1$	
$t_{w(NWAIT)}$	FMC_NWAIT low time	$T_{fmc_ker_ck}-0.5$	-	
$t_{su(NWAIT_NE)}$	FMC_NWAIT valid before FMC_NEx high	$4T_{fmc_ker_ck}+11$	-	
$t_{h(NE_NWAIT)}$	FMC_NEx hold time after FMC_NWAIT invalid	$3T_{fmc_ker_ck}+11.5$	-	

1. Guaranteed by characterization results.
2. N_{WAIT} pulse width is equal to 1 AHB cycle.

Figure 30. Asynchronous non-multiplexed SRAM/PSRAM/NOR write waveforms

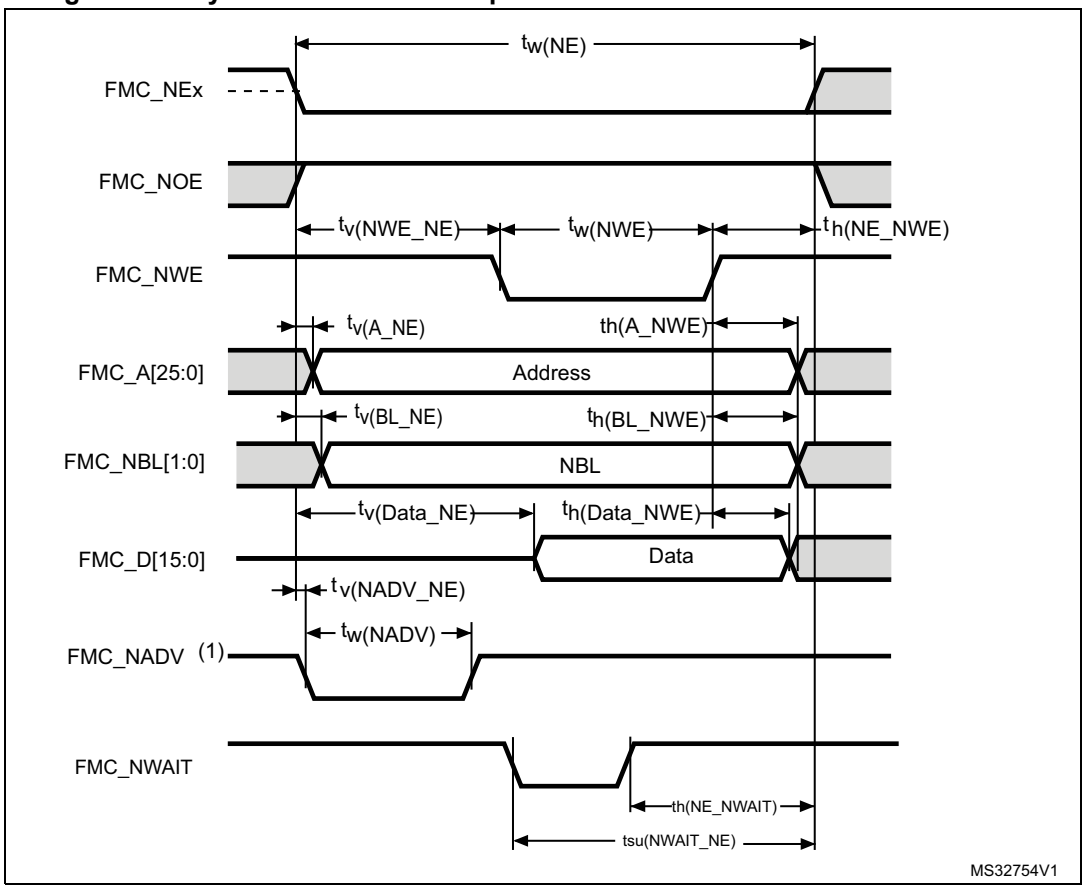

1. Mode 2/B, C and D only. In Mode 1, FMC_NADV is not used.

Table 80. Asynchronous non-multiplexed SRAM/PSRAM/NOR write timings(1)

Symbol	Parameter	Min	Max	Unit
$t_{w(NE)}$	FMC_NE low time	$3T_{fmc_ker_ck}-1$	$3T_{fmc_ker_ck}$	ns
$t_{v(NWE_NE)}$	FMC_NEx low to FMC_NWE low	$T_{fmc_ker_ck}$	$T_{fmc_ker_ck}+1$	
$t_{w(NWE)}$	FMC_NWE low time	$T_{fmc_ker_ck}-0.5$	$T_{fmc_ker_ck}+0.5$	
$t_{h(NE_NWE)}$	FMC_NWE high to FMC_NE high hold time	$T_{fmc_ker_ck}$	-	
$t_{v(A_NE)}$	FMC_NEx low to FMC_A valid	-	2	
$t_{h(A_NWE)}$	Address hold time after FMC_NWE high	$T_{fmc_ker_ck}-0.5$	-	
$t_{v(BL_NE)}$	FMC_NEx low to FMC_BL valid	-	0.5	
$t_{h(BL_NWE)}$	FMC_BL hold time after FMC_NWE high	$T_{fmc_ker_ck}-0.5$	-	
$t_{v(Data_NE)}$	Data to FMC_NEx low to Data valid	-	$T_{fmc_ker_ck}+2.5$	
$t_{h(Data_NWE)}$	Data hold time after FMC_NWE high	$T_{fmc_ker_ck}+0.5$	-	
$t_{v(NADV_NE)}$	FMC_NEx low to FMC_NADV low	-	0	
$t_{w(NADV)}$	FMC_NADV low time	-	$T_{fmc_ker_ck}+1$	

1. Guaranteed by characterization results.

Table 81. Asynchronous non-multiplexed SRAM/PSRAM/NOR write-NWAIT timings(1)(2)

Symbol	Parameter	Min	Max	Unit
$t_{w(NE)}$	FMC_NE low time	$8T_{fmc_ker_ck}-1$	$8T_{fmc_ker_ck}+1$	ns
$t_{w(NWE)}$	FMC_NWE low time	$6T_{fmc_ker_ck}-1.5$	$6T_{fmc_ker_ck}+0.5$	
$t_{su(NWAIT_NE)}$	FMC_NWAIT valid before FMC_NEx high	$5T_{fmc_ker_ck}+13$	-	
$t_{h(NE_NWAIT)}$	FMC_NEx hold time after FMC_NWAIT invalid	$4T_{fmc_ker_ck}+13$	-	

1. Guaranteed by characterization results.
2. N_{WAIT} pulse width is equal to 1 AHB cycle.

Figure 31. Asynchronous multiplexed PSRAM/NOR read waveforms

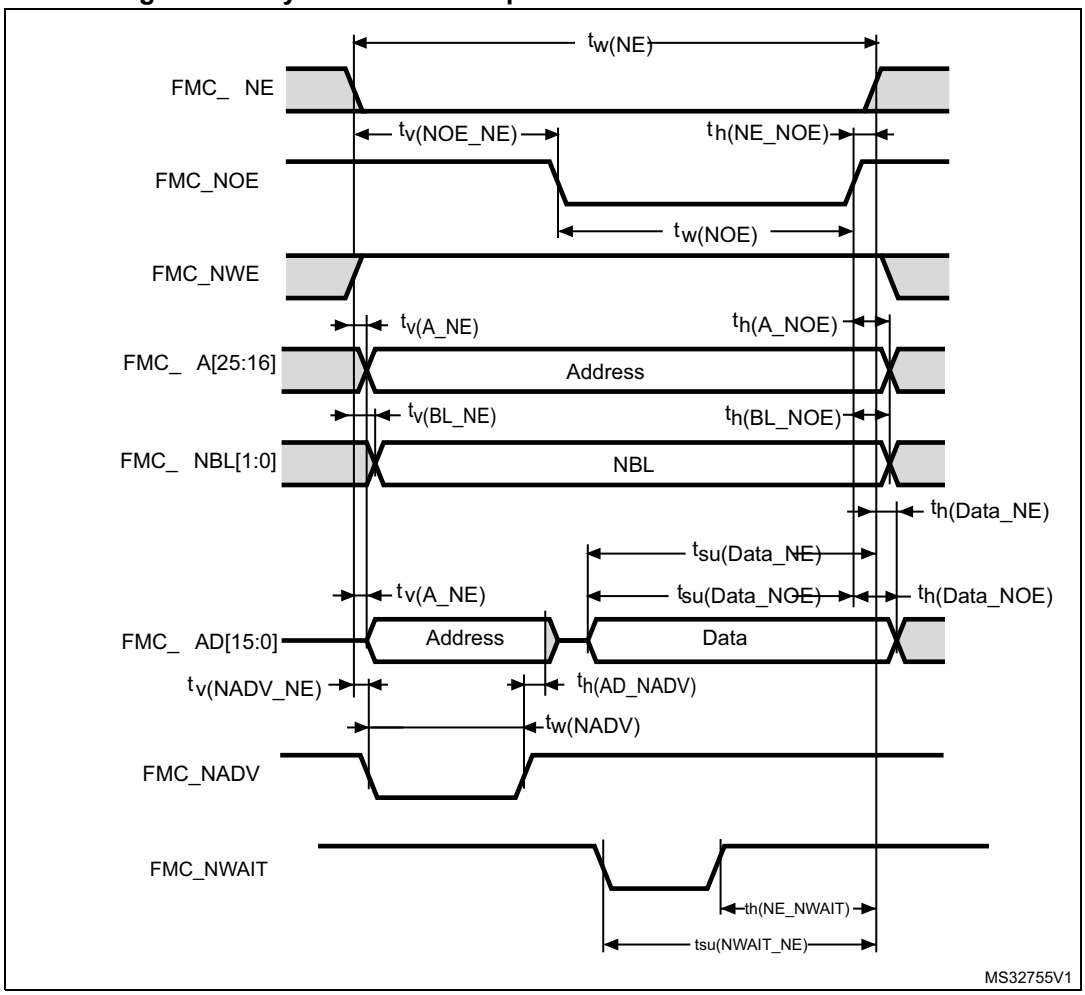

Table 82. Asynchronous multiplexed PSRAM/NOR read timings(1)

Symbol	Parameter	Min	Max	Unit
$t_{w(NE)}$	FMC_NE low time	$4T_{fmc_ker_ck} - 1$	$4T_{fmc_ker_ck} + 1$	ns
$t_{v(NOE_NE)}$	FMC_NEx low to FMC_NOE low	$2T_{fmc_ker_ck}$	$2T_{fmc_ker_ck} + 0.5$	
$t_{tw(NOE)}$	FMC_NOE low time	$T_{fmc_ker_ck} - 1$	$T_{fmc_ker_ck} + 1$	
$t_{h(NE_NOE)}$	FMC_NOE high to FMC_NE high hold time	0	-	
$t_{v(A_NE)}$	FMC_NEx low to FMC_A valid	-	0.5	
$t_{v(NADV_NE)}$	FMC_NEx low to FMC_NADV low	0	0.5	
$t_{w(NADV)}$	FMC_NADV low time	$T_{fmc_ker_ck} - 0.5$	$T_{fmc_ker_ck} + 1$	
$t_{h(AD_NADV)}$	FMC_AD(address) valid hold time after FMC_NADV high)	$T_{fmc_ker_ck} + 0.5$	-	
$t_{h(A_NOE)}$	Address hold time after FMC_NOE high	$T_{fmc_ker_ck} - 0.5$	-	
$t_{su(Data_NE)}$	Data to FMC_NEx high setup time	11	-	
$t_{su(Data_NOE)}$	Data to FMC_NOE high setup time	11	-	
$t_{h(Data_NE)}$	Data hold time after FMC_NEx high	0	-	
$t_{h(Data_NOE)}$	Data hold time after FMC_NOE high	0	-	

1. Guaranteed by characterization results.

Table 83. Asynchronous multiplexed PSRAM/NOR read-NWAIT timings(1)(2)

Symbol	Parameter	Min	Max	Unit
$t_{w(NE)}$	FMC_NE low time	$8T_{fmc_ker_ck} - 1$	$8T_{fmc_ker_ck}$	ns
$t_{w(NOE)}$	FMC_NWE low time	$5T_{fmc_ker_ck} - 1.5$	$5T_{fmc_ker_ck} + 0.5$	
$t_{su(NWAIT_NE)}$	FMC_NWAIT valid before FMC_NEx high	$4T_{fmc_ker_ck} + 11$	-	
$t_{h(NE_NWAIT)}$	FMC_NEx hold time after FMC_NWAIT invalid	$3T_{fmc_ker_ck} + 11.5$	-	

1. Guaranteed by characterization results.
2. N_{WAIT} pulse width is equal to 1 AHB cycle.

Table 84. Asynchronous multiplexed PSRAM/NOR write timings(1)

Symbol	Parameter	Min	Max	Unit
$t_{w(NE)}$	FMC_NE low time	$4T_{fmc_ker_ck}$ –1	$4T_{fmc_ker_ck}$	ns
$t_{v(NWE_NE)}$	FMC_NEx low to FMC_NWE low	$T_{fmc_ker_ck}$ –1	$T_{fmc_ker_ck}$ +0.5	
$t_{w(NWE)}$	FMC_NWE low time	$2T_{fmc_ker_ck}$ –0.5	$2T_{fmc_ker_ck}$ +0.5	
$t_{h(NE_NWE)}$	FMC_NWE high to FMC_NE high hold time	$T_{fmc_ker_ck}$ –0.5	-	
$t_{v(A_NE)}$	FMC_NEx low to FMC_A valid	-	0	
$t_{v(NADV_NE)}$	FMC_NEx low to FMC_NADV low	0	0.5	
$t_{w(NADV)}$	FMC_NADV low time	$T_{fmc_ker_ck}$	$T_{fmc_ker_ck}$ + 1	
$t_{h(AD_NADV)}$	FMC_AD(adress) valid hold time after FMC_NADV high)	$T_{fmc_ker_ck}$ +0.5	-	
$t_{h(A_NWE)}$	Address hold time after FMC_NWE high	$T_{fmc_ker_ck}$ +0.5	-	
$t_{h(BL_NWE)}$	FMC_BL hold time after FMC_NWE high	$T_{fmc_ker_ck}$ – 0.5	-	
$t_{v(BL_NE)}$	FMC_NEx low to FMC_BL valid	-	0.5	
$t_{v(Data_NADV)}$	FMC_NADV high to Data valid	-	$T_{fmc_ker_ck}$ +2	
$t_{h(Data_NWE)}$	Data hold time after FMC_NWE high	$T_{fmc_ker_ck}$ +0.5	-	

1. Guaranteed by characterization results.

Table 85. Asynchronous multiplexed PSRAM/NOR write-NWAIT timings(1)(2)

Symbol	Parameter	Min	Max	Unit
$t_{w(NE)}$	FMC_NE low time	$9T_{fmc_ker_ck}$ –1	$9T_{fmc_ker_ck}$	ns
$t_{w(NWE)}$	FMC_NWE low time	$7T_{fmc_ker_ck}$ –0.5	$7T_{fmc_ker_ck}$ +0.5	
$t_{su(NWAIT_NE)}$	FMC_NWAIT valid before FMC_NEx high	$5T_{fmc_ker_ck}$ +11	-	
$t_{h(NE_NWAIT)}$	FMC_NEx hold time after FMC_NWAIT invalid	$4T_{fmc_ker_ck}$ +11.5	-	

1. Guaranteed by characterization results.
2. N_{WAIT} pulse width is equal to 1 AHB cycle.

Synchronous waveforms and timings

Figure 32 through *Figure 35* represent synchronous waveforms and *Table 86* through *Table 89* provide the corresponding timings. The results shown in these tables are obtained with the following FMC configuration:

- BurstAccessMode = FMC_BurstAccessMode_Enable
- MemoryType = FMC_MemoryType_CRAM
- WriteBurst = FMC_WriteBurst_Enable
- CLKDivision = 1
- DataLatency = 1 for NOR flash; DataLatency = 0 for PSRAM

In all the timing tables, the $T_{fmc_ker_ck}$ is the $f_{mc_ker_ck}$ clock period, with the following FMC_CLK maximum values:

- For 2.7 V<V_{DD}<3.6 V, FMC_CLK = 125 MHz at 20 pF
- For 1.8 V<V_{DD}<1.9 V, FMC_CLK = 100 MHz at 20 pF
- For 1.62 V<V_{DD}<1.8 V, FMC_CLK = 100 MHz at 15 pF

Figure 32. Synchronous multiplexed NOR/PSRAM read timings

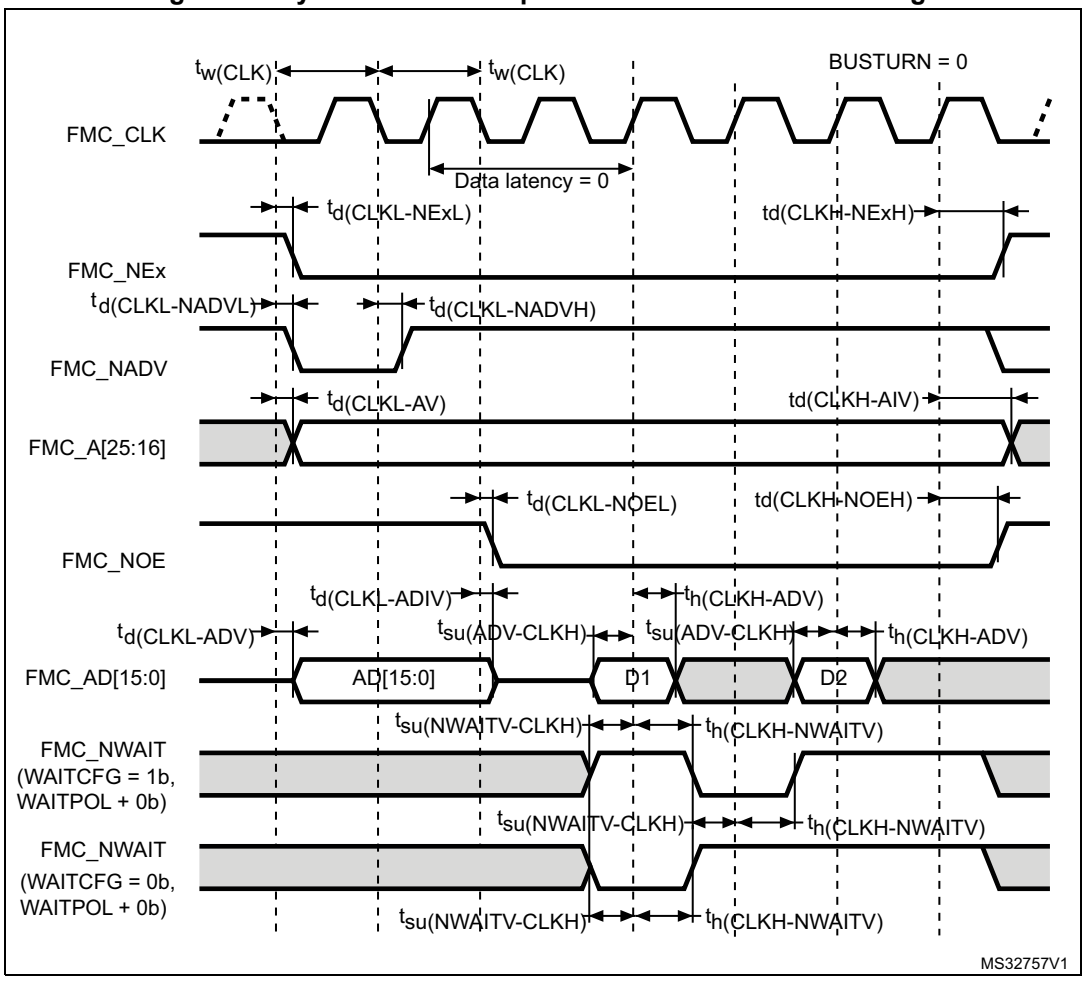

Table 86. Synchronous multiplexed NOR/PSRAM read timings(1)

Symbol	Parameter	Min	Max	Unit
$t_{w(CLK)}$	FMC_CLK period	$2T_{fmc_ker_ck}-1$	-	ns
$t_{d(CLKL-NExL)}$	FMC_CLK low to FMC_NEx low (x=0..2)	-	1	
$t_{d(CLKH_NExH)}$	FMC_CLK high to FMC_NEx high (x= 0…2)	$T_{fmc_ker_ck}+0.5$	-	
$t_{d(CLKL-NADVL)}$	FMC_CLK low to FMC_NADV low	-	1	
$t_{d(CLKL-NADVH)}$	FMC_CLK low to FMC_NADV high	0	-	
$t_{d(CLKL-AV)}$	FMC_CLK low to FMC_Ax valid (x=16…25)	-	2.5	
$t_{d(CLKH-AIV)}$	FMC_CLK high to FMC_Ax invalid (x=16…25)	$T_{fmc_ker_ck}$	-	
$t_{d(CLKL-NOEL)}$	FMC_CLK low to FMC_NOE low	-	1.5	
$t_{d(CLKH-NOEH)}$	FMC_CLK high to FMC_NOE high	$T_{fmc_ker_ck}-0.5$	-	
$t_{d(CLKL-ADV)}$	FMC_CLK low to FMC_AD[15:0] valid	-	3	
$t_{d(CLKL-ADIV)}$	FMC_CLK low to FMC_AD[15:0] invalid	0	-	
$t_{su(ADV-CLKH)}$	FMC_A/D[15:0] valid data before FMC_CLK high	3	-	
$t_{h(CLKH-ADV)}$	FMC_A/D[15:0] valid data after FMC_CLK high	0	-	
$t_{su(NWAIT-CLKH)}$	FMC_NWAIT valid before FMC_CLK high	3	-	
$t_{h(CLKH-NWAIT)}$	FMC_NWAIT valid after FMC_CLK high	1	-	

1. Guaranteed by characterization results.

Figure 33. Synchronous multiplexed PSRAM write timings

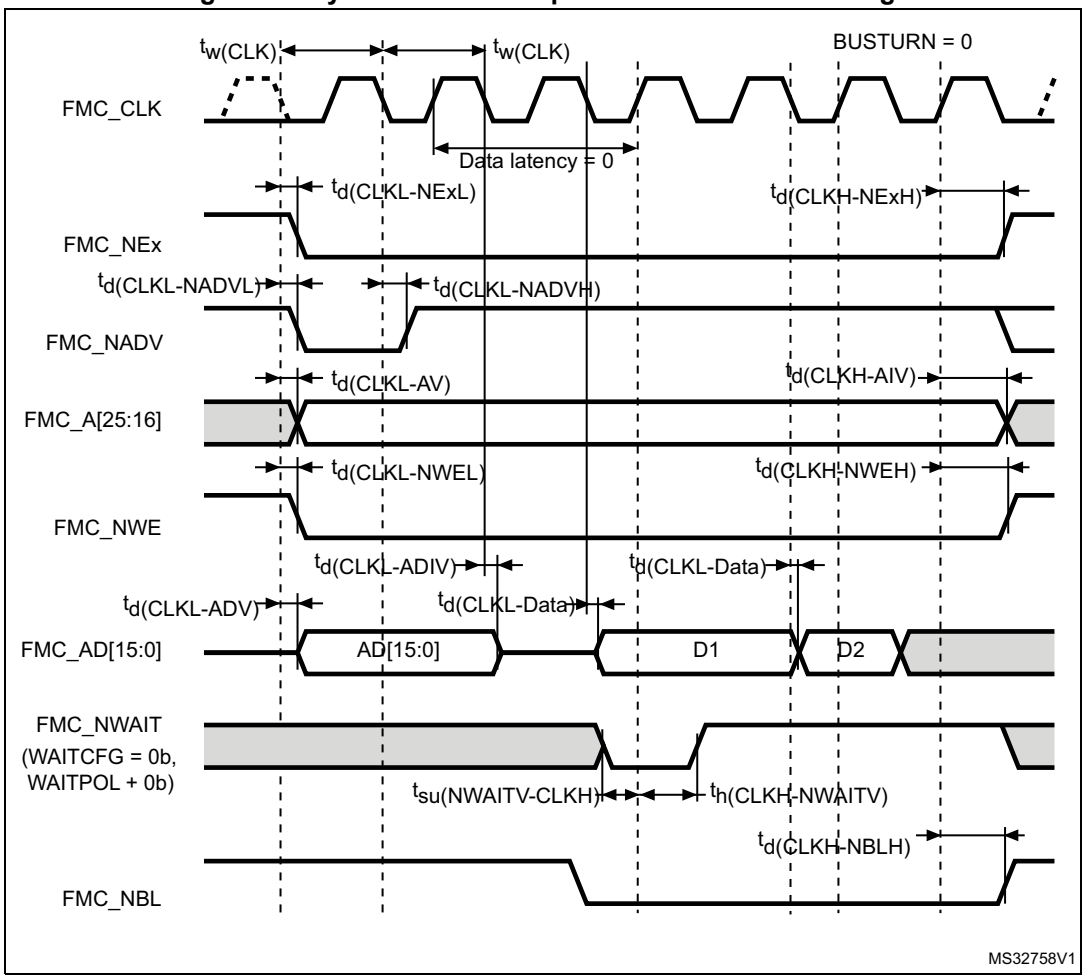

Table 87. Synchronous multiplexed PSRAM write timings(1)

Symbol	Parameter	Min	Max	Unit
$t_{w(CLK)}$	FMC_CLK period, V_{DD} = 2.7 to 3.6 V	$2T_{fmc_ker_ck} - 1$ 1	-	Ns
$t_{d(CLKL-NExL)}$	FMC_CLK low to FMC_NEx low (x =0..2)	-	1	
$t_{d(CLKH-NExH)}$	FMC_CLK high to FMC_NEx high (x = 0…2)	$T_{fmc_ker_ck}$ +0.5	-	
$t_{d(CLKL-NADVL)}$	FMC_CLK low to FMC_NADV low	-	1.5	
$t_{d(CLKL-NADVH)}$	FMC_CLK low to FMC_NADV high	0	-	
$t_{d(CLKL-AV)}$	FMC_CLK low to FMC_Ax valid (x =16…25)	-	2	
$t_{d(CLKH-AIV)}$	FMC_CLK high to FMC_Ax invalid (x =16…25)	$T_{fmc_ker_ck}$	-	
$t_{d(CLKL-NWEL)}$	FMC_CLK low to FMC_NWE low	-	1.5	
$t_{(CLKH-NWEH)}$	FMC_CLK high to FMC_NWE high	$T_{fmc_ker_ck}$ +0.5	-	
$t_{d(CLKL-ADV)}$	FMC_CLK low to to FMC_AD[15:0] valid	-	2.5	
$t_{d(CLKL-ADIV)}$	FMC_CLK low to FMC_AD[15:0] invalid	0	-	
$t_{d(CLKL-DATA)}$	FMC_A/D[15:0] valid data after FMC_CLK low	-	2.5	
$t_{d(CLKL-NBLL)}$	FMC_CLK low to FMC_NBL low	-	2	
$t_{d(CLKH-NBLH)}$	FMC_CLK high to FMC_NBL high	$T_{fmc_ker_ck}$ +0.5	-	
$t_{su(NWAIT-CLKH)}$	FMC_NWAIT valid before FMC_CLK high	2	-	
$t_{h(CLKH-NWAIT)}$	FMC_NWAIT valid after FMC_CLK high	2	-	

1. Guaranteed by characterization results.

Figure 34. Synchronous non-multiplexed NOR/PSRAM read timings

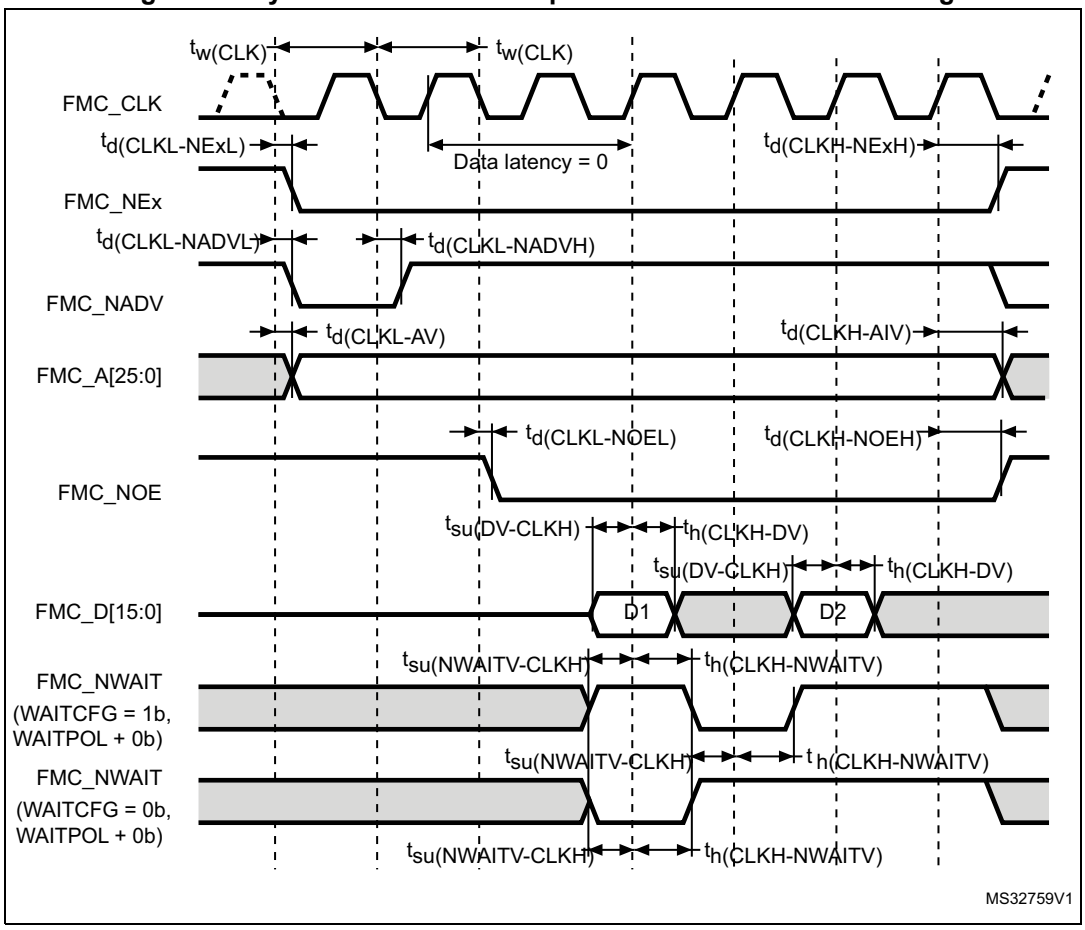

Table 88. Synchronous non-multiplexed NOR/PSRAM read timings(1)

Symbol	Parameter	Min	Max	Unit
$t_{w(CLK)}$	FMC_CLK period	$2T_{fmc_ker_ck}-1$	-	ns
$t_{(CLKL-NExL)}$	FMC_CLK low to FMC_NEx low (x=0..2)	-	1	
$t_{d(CLKH-NExH)}$	FMC_CLK high to FMC_NEx high (x= 0…2)	$2T_{fmc_ker_ck}+0.5$	-	
$t_{d(CLKL-NADVL)}$	FMC_CLK low to FMC_NADV low	-	0.5	
$t_{d(CLKL-NADVH)}$	FMC_CLK low to FMC_NADV high	0	-	
$t_{d(CLKL-AV)}$	FMC_CLK low to FMC_Ax valid (x=16…25)	-	2	
$t_{d(CLKH-AIV)}$	FMC_CLK high to FMC_Ax invalid (x=16…25)	$2T_{fmc_ker_ck}$	-	
$t_{d(CLKL-NOEL)}$	FMC_CLK low to FMC_NOE low	-	1.5	
$t_{d(CLKH-NOEH)}$	FMC_CLK high to FMC_NOE high	$2T_{fmc_ker_ck}-0.5$	-	
$t_{su(DV-CLKH)}$	FMC_D[15:0] valid data before FMC_CLK high	3	-	
$t_{h(CLKH-DV)}$	FMC_D[15:0] valid data after FMC_CLK high	0	-	
$t_{su(NWAIT-CLKH)}$	FMC_NWAIT valid before FMC_CLK high	3	-	
$t_{h(CLKH-NWAIT)}$	FMC_NWAIT valid after FMC_CLK high	1	-	

1. Guaranteed by characterization results.

Figure 35. Synchronous non-multiplexed PSRAM write timings

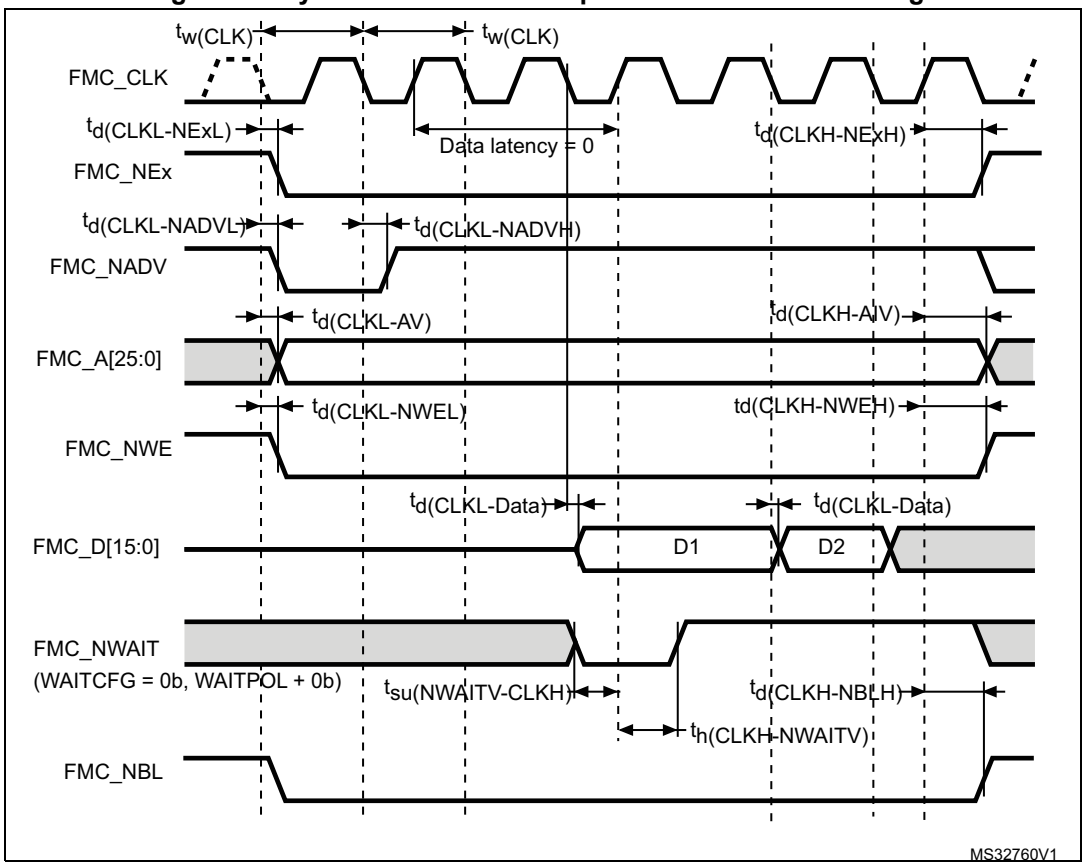

Table 89. Synchronous non-multiplexed PSRAM write timings(1)

Symbol	Parameter	Min	Max	Unit
$t_{(CLK)}$	FMC_CLK period	$2T_{fmc_ker_ck}-1$	-	ns
$t_{d(CLKL-NExL)}$	FMC_CLK low to FMC_NEx low (x=0..2)	-	2	
$t_{(CLKH-NExH)}$	FMC_CLK high to FMC_NEx high (x= 0…2)	$T_{fmc_ker_ck}$**+0.5**	-	
$t_{d(CLKL-NADVL)}$	FMC_CLK low to FMC_NADV low	-	0.5	
$t_{d(CLKL-NADVH)}$	FMC_CLK low to FMC_NADV high	**0**	-	
$t_{d(CLKL-AV)}$	FMC_CLK low to FMC_Ax valid (x=16…25)	-	2.	
$t_{d(CLKH-AIV)}$	FMC_CLK high to FMC_Ax invalid (x=16…25)	$T_{fmc_ker_ck}$	-	
$t_{d(CLKL-NWEL)}$	FMC_CLK low to FMC_NWE low	-	1.5	
$t_{d(CLKH-NWEH)}$	FMC_CLK high to FMC_NWE high	$T_{fmc_ker_ck}+1$	-	
$t_{d(CLKL-Data)}$	FMC_D[15:0] valid data after FMC_CLK low	-	3.5	
$t_{d(CLKL-NBLL)}$	FMC_CLK low to FMC_NBL low	-	2	
$t_{d(CLKH-NBLH)}$	FMC_CLK high to FMC_NBL high	$T_{fmc_ker_ck}+1$	-	
$t_{su(NWAIT-CLKH)}$	FMC_NWAIT valid before FMC_CLK high	2	-	
$t_{h(CLKH-NWAIT)}$	FMC_NWAIT valid after FMC_CLK high	2	-	

1. Guaranteed by characterization results.

NAND controller waveforms and timings

Figure 36 and *Figure 37* represent synchronous waveforms, and *Table 90* and *Table 91* provide the corresponding timings. The results shown in this table are obtained with the following FMC configuration:

- COM.FMC_SetupTime = 0x01
- COM.FMC_WaitSetupTime = 0x03
- COM.FMC_HoldSetupTime = 0x02
- COM.FMC_HiZSetupTime = 0x01
- ATT.FMC_SetupTime = 0x01
- ATT.FMC_WaitSetupTime = 0x03
- ATT.FMC_HoldSetupTime = 0x02
- ATT.FMC_HiZSetupTime = 0x01
- Bank = FMC_Bank_NAND
- MemoryDataWidth = FMC_MemoryDataWidth_16b
- ECC = FMC_ECC_Enable
- ECCPageSize = FMC_ECCPageSize_512Bytes
- TCLRSetupTime = 0
- TARSetupTime = 0
- Capacitive load C_L = 30 pF

In all timing tables, the $T_{fmc_ker_ck}$ is the fmc_ker_ck clock period.

Figure 36. NAND controller waveforms for read access

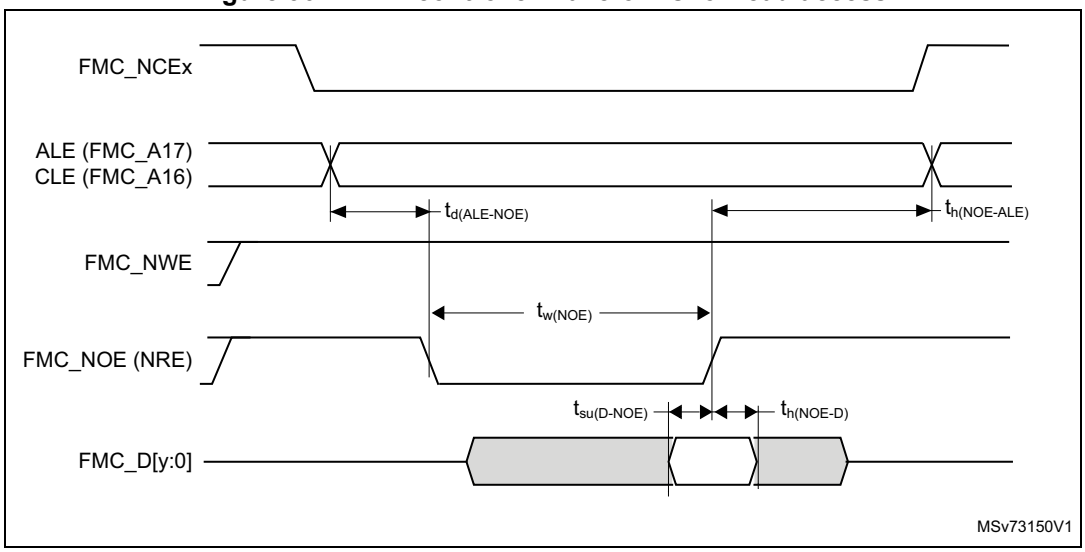

1. y = 7 or 15, depending on the NAND flash memory interface.

Figure 37. NAND controller waveforms for write access

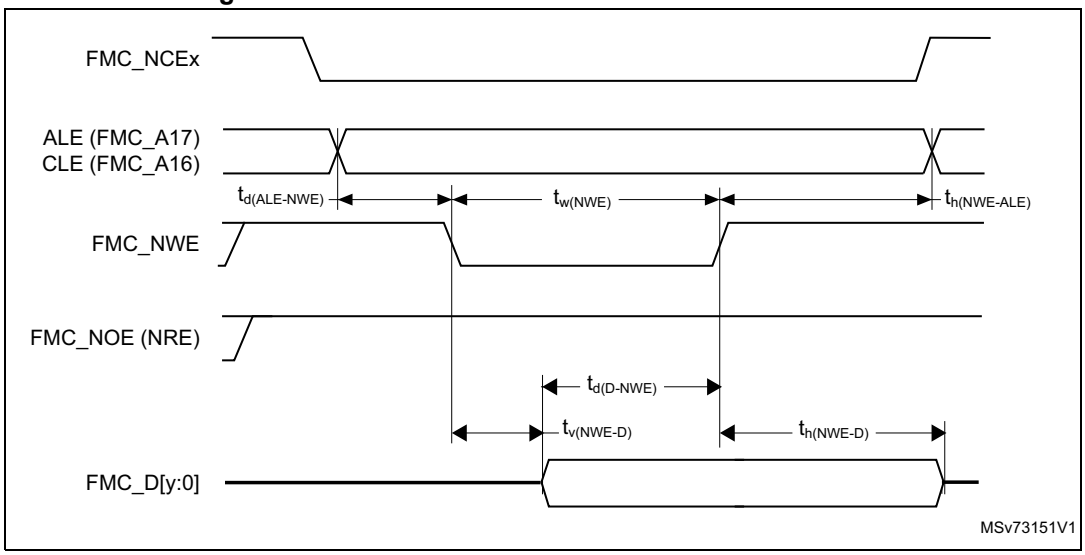

1. y = 7 or 15, depending on the NAND flash memory interface.

Table 90. Switching characteristics for NAND flash read cycles(1)

Symbol	Parameter	Min	Max	Unit
$t_{w(N0E)}$	FMC_NOE low width	$4T_{fmc_ker_ck} - 0.5$	$4T_{fmc_ker_ck}+0.5$	ns
$t_{su(D-NOE)}$	FMC_D[15-0] valid data before FMC_NOE high	8	-	
$t_{h(NOE-D)}$	FMC_D[15-0] valid data after FMC_NOE high	0	-	
$t_{d(ALE-NOE)}$	FMC_ALE valid before FMC_NOE low	-	$3T_{fmc_ker_ck} +1$	
$t_{h(NOE-ALE)}$	FMC_NWE high to FMC_ALE invalid	$4T_{fmc_ker_ck} -2$	-	

1. Guaranteed by characterization results.

Table 91. Switching characteristics for NAND flash write cycles(1)

Symbol	Parameter	Min	Max	Unit
$t_{w(NWE)}$	FMC_NWE low width	$4T_{fmc_ker_ck} - 0.5$	$4T_{fmc_ker_ck} +0.5$	ns
$t_{v(NWE-D)}$	FMC_NWE low to FMC_D[15-0] valid	0	-	
$t_{h(NWE-D)}$	FMC_NWE high to FMC_D[15-0] invalid	$2T_{fmc_ker_ck} - 0.5$	-	
$t_{d(D-NWE)}$	FMC_D[15-0] valid before FMC_NWE high	$5T_{fmc_ker_ck} - 1$	-	
$t_{d(ALE-NWE)}$	FMC_ALE valid before FMC_NWE low	-	$3T_{fmc_ker_ck} +0.5$	
$t_{h(NWE-ALE)}$	FMC_NWE high to FMC_ALE invalid	$2T_{fmc_ker_ck} - 1$	-	

1. Guaranteed by characterization results.

SDRAM waveforms and timings

In all timing tables, the TKERCK is the fmc_ker_ck clock period, with the following FMC_SDCLK maximum values:

- For 2.7 V<V_{DD}<3.6 V: FMC_SDCLK =110 MHz at 20 pF
- For 1.8 V<V_{DD}<1.9 V: FMC_SDCLK =100 MHz at 20 pF
- For 1.62 V<$_{DD}$<1.8 V, FMC_SDCLK =100 MHz at 15 pF

Figure 38. SDRAM read access waveforms (CL = 1)

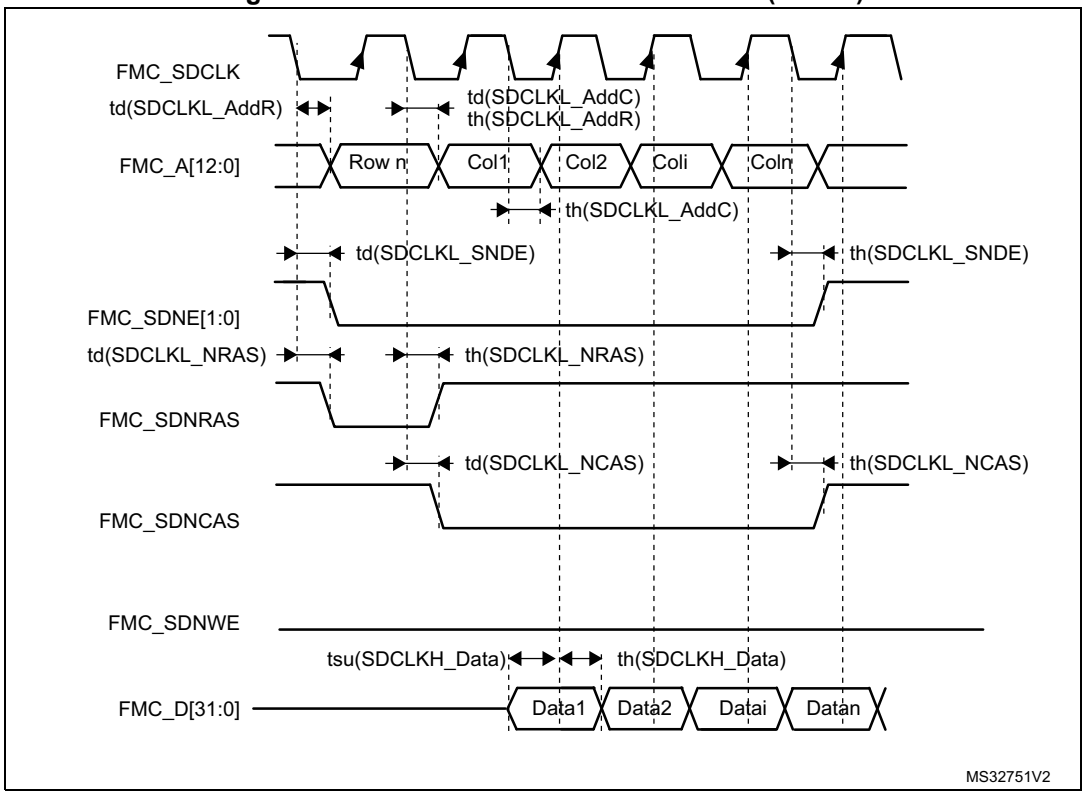

Table 92. SDRAM read timings(1)

Symbol	Parameter	Min	Max	Unit
$t_{w(SDCLK)}$	FMC_SDCLK period	$2T_{fmc_ker_ck} - 1$	$2T_{fmc_ker_ck}$ +0.5	ns
$t_{su(SDCLKH_Data)}$	Data input setup time	3	-	
$t_{h(SDCLKH_Data)}$	Data input hold time	0	-	
$t_{d(SDCLKL_Add)}$	Address valid time	-	1.5	
$t_{d(SDCLKL_SDNE)}$	Chip select valid time	-	1.5	
$t_{h(SDCLKL_SDNE)}$	Chip select hold time	0.5	-	
$t_{d(SDCLKL_SDNRAS)}$	SDNRAS valid time	-	1	
$t_{h(SDCLKL_SDNRAS)}$	SDNRAS hold time	0.5	-	
$t_{d(SDCLKL_SDNCAS)}$	SDNCAS valid time	-	0.5	
$t_{h(SDCLKL_SDNCAS)}$	SDNCAS hold time	0	-	

1. Guaranteed by characterization results.

Table 93. LPSDR SDRAM read timings(1)

Symbol	Parameter	Min	Max	Unit
$t_{W(SDCLK)}$	FMC_SDCLK period	$2T_{fmc_ker_ck} - 1$	$2T_{fmc_ker_ck}$+0.5	ns
$t_{su(SDCLKH_Data)}$	Data input setup time	3	-	
$t_{h(SDCLKH_Data)}$	Data input hold time	0.5	-	
$t_{d(SDCLKL_Add)}$	Address valid time	-	2.5	
$t_{d(SDCLKL_SDNE)}$	Chip select valid time	-	2.5	
$t_{h(SDCLKL_SDNE)}$	Chip select hold time	0	-	
$t_{d(SDCLKL_SDNRAS}$	SDNRAS valid time	-	0.5	
$t_{h(SDCLKL_SDNRAS)}$	SDNRAS hold time	0	-	
$t_{d(SDCLKL_SDNCAS)}$	SDNCAS valid time	-	1.5	
$t_{h(SDCLKL_SDNCAS)}$	SDNCAS hold time	0	-	

1. Guaranteed by characterization results.

Figure 39. SDRAM write access waveforms

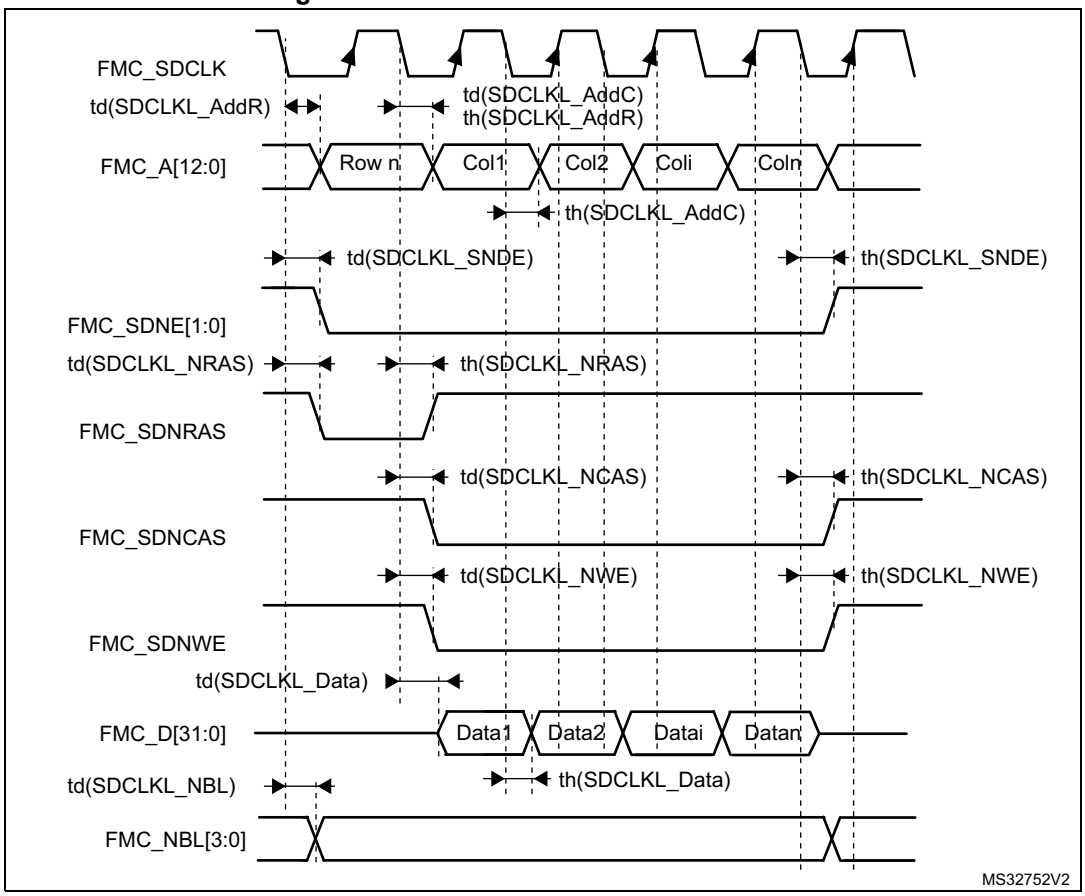

Table 94. SDRAM Write timings(1)

Symbol	Parameter	Min	Max	Unit
$t_{w(SDCLK)}$	FMC_SDCLK period	$2T_{fmc_ker_ck} - 1$	$2T_{fmc_ker_ck}+0.5$	ns
$t_{d(SDCLKL_Data)}$	Data output valid time	-	1	
$t_{h(SDCLKL_Data)}$	Data output hold time	0	-	
$t_{d(SDCLKL_Add)}$	Address valid time	-	1.5	
$t_{d(SDCLKL_SDNWE)}$	SDNWE valid time	-	1.5	
$t_{h(SDCLKL_SDNWE)}$	SDNWE hold time	0.5	-	
$t_{d(SDCLKL_SDNE)}$	Chip select valid time	-	1.5	
$t_{h(SDCLKL-_SDNE)}$	Chip select hold time	0.5	-	
$t_{d(SDCLKL_SDNRAS)}$	SDNRAS valid time	-	1	
$t_{h(SDCLKL_SDNRAS)}$	SDNRAS hold time	0.5	-	
$t_{d(SDCLKL_SDNCAS)}$	SDNCAS valid time	-	1	
$t_{d(SDCLKL_SDNCAS)}$	SDNCAS hold time	0.5	-	

1. Guaranteed by characterization results.

Table 95. LPSDR SDRAM Write timings(1)

Symbol	Parameter	Min	Max	Unit
$t_{w(SDCLK)}$	FMC_SDCLK period	$2T_{fmc_ker_ck} - 1$	$2T_{fmc_ker_ck}+0.5$	ns
$t_{d(SDCLKL_Data)}$	Data output valid time	-	2.5	
$t_{h(SDCLKL_Data)}$	Data output hold time	0	-	
$t_{d(SDCLKL_Add)}$	Address valid time	-	2.5	
$t_{d(SDCLKL-SDNWE)}$	SDNWE valid time	-	2.5	
$t_{h(SDCLKL-SDNWE)}$	SDNWE hold time	0	-	
$t_{d(SDCLKL-SDNE)}$	Chip select valid time	-	3	
$t_{h(SDCLKL-SDNE)}$	Chip select hold time	0	-	
$t_{d(SDCLKL-SDNRAS)}$	SDNRAS valid time	-	1.5	
$t_{h(SDCLKL-SDNRAS)}$	SDNRAS hold time	0	-	
$t_{d(SDCLKL-SDNCAS)}$	SDNCAS valid time	-	1.5	
$t_{d(SDCLKL-SDNCAS)}$	SDNCAS hold time	0	-	

1. Guaranteed by characterization results.

6.3.21 Quad-SPI interface characteristics

Unless otherwise specified, the parameters given in *Table 96* and *Table 97* for QUADSPI are derived from tests performed under the ambient temperature, f_{AHB} frequency and V_{DD} supply voltage conditions summarized in *Table 23: General operating conditions*, with the following configuration:

- Output speed is set to OSPEEDRy[1:0] = 11
- Measurement points are done at CMOS levels: $0.5V_{DD}$
- IO Compensation cell activated.
- HSLV activated when $V_{DD} \leq 2.7$ V
- VOS level set to VOS1

Refer to *Section 6.3.18: I/O port characteristics* for more details on the input/output alternate function characteristics.

The following table summarizes the parameters measured in SDR mode.

Table 96. QUADSPI characteristics in SDR mode(1)

Symbol	Parameter	Conditions	Min	Typ	Max	Unit
$F_{ck1}1/T_{CK}$	QUADSPI clock frequency	$2.7<V_{DD}<3.6$ V CL = 20 pF	-	-	133	MHz
		$1.62<V_{DD}<3.6$ V CL = 15 pF	-	-	100	
$t_{w(CKH)}$	QUADSPI clock high and low time Even division	PRESCALER[7:0] = n = 0,1,3,5...	$T_{CK}/2–0.5$	-	$T_{CK}/2$	ns
$t_{w(CKL)}$			$T_{CK}/2$	-	$T_{CK}/2+0.5$	
$t_{w(CKH)}$	QUADSPI clock high and low time Odd division	PRESCALER[7:0] = n = 2,4,6,8...	$(n/2)*T_{CK}/(n+1)-0.5$	-	$(n/2)*T_{CK}/ (n+1)$	
$t_{w(CKL)}$			$(n/2+1)*T_{CK}/(n+1)$	-	$(n/2+1)*T_{CK}/ (n+1)+0.5$	
$t_{s(IN)}$	Data input setup time	$2.7<V_{DD}<3.6$ V	2	-	-	
		$1.62<V_{DD}<3.6$ V	2	-	-	
$t_{h(IN)}$	Data input hold time	$2.7<V_{DD}<3.6$ V	1	-	-	
		$1.62<V_{DD}<3.6$ V	2.5	-	-	
$t_{v(OUT)}$	Data output valid time	-	-	1	2	
$t_{h(OUT)}$	Data output hold time	-	0	-	-	

1. Guaranteed by characterization results.

The following table summarizes the parameters measured in DDR mode.

Table 97. QUADSPI characteristics in DDR mode(1)

Symbol	Parameter	Conditions	Min	Typ	Max	Unit
$F_{ck1}1/T_{CK}$	QUADSPI clock frequency	2.7<V_{DD}<3.6 V CL = 20 pF	-	-	100	MHz
		1.62<V_{DD}<3.6 V CL = 15 pF	-	-	100	
$t_{w(CKH)}$	QUADSPI clock high and low time Even division	PRESCALER[7:0] = n = 0,1,3,5...	$T_{CK}/2–0.5$	-	$T_{CK}/2$	ns
$t_{w(CKL)}$			$T_{CK}/2$	-	$T_{CK}/2+0.5$	
$t_{w(CKH)}$	QUADSPI clock high and low time Odd division	PRESCALER[7:0] = n = 2,4,6,8...	$(n/2)*T_{CK}/(n+1)-0.5$	-	$(n/2)*T_{CK}/(n+1)$	
$t_{w(CKL)}$			$(n/2+1)*T_{CK}/(n+1)$	-	$(n/2+1)*T_{CK}/(n+1)+0.5$	
$t_{sr(IN)}$, $t_{sf(IN)}$	Data input setup time	2.7<V_{DD}<3.6 V	2.5	-	-	
		1.62<V_{DD}<3.6 V	1.5	-	-	
$t_{hr(IN)}$,$t_{hf(IN)}$	Data input hold time	2.7<V_{DD}<3.6 V	1	-	-	
		1.62<V_{DD}<3.6 V	2.5			
$t_{vr(OUT)}$, $t_{vf(OUT)}$	Data output valid time	DHHC=0	-	5	6	
		DHHC=1 PRESCALER[7:0] = 1,2…	-	$T_{CK}/4+1$	$T_{CK}/4+2$	
$t_{hr(OUT)}$, $t_{hf(OUT)}$	Data output hold time	DHHC=0	3	-	-	
		DHHC=1 PRESCALER[7:0]=1,2…	$T_{CK}/4$	-	-	

1. Guaranteed by characterization results.

Figure 40. QUADSPI timing diagram - SDR mode

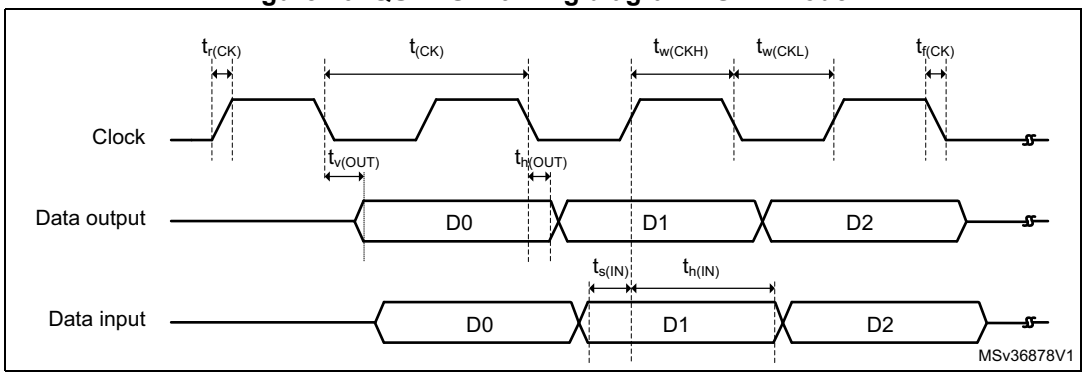

Figure 41. Quad-SPI timing diagram - DDR mode

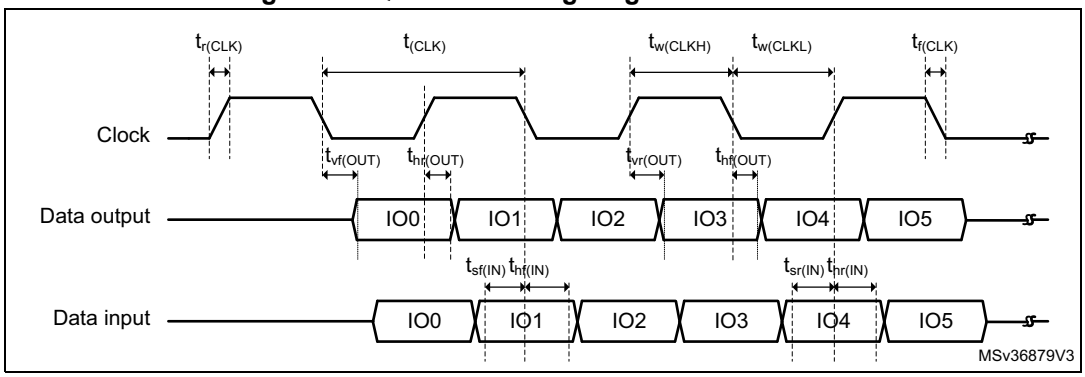

6.3.22 Delay block (DLYB) characteristics

Unless otherwise specified, the parameters given in *Table 98* for Delay Block are derived from tests performed under the ambient temperature, $f_{rcc_c_ck}$ frequency and VDD supply voltage summarized in *Table 23: General operating conditions*, with the following configuration:

Table 98. Delay Block characteristics

Symbol	Parameter	Conditions	Min	Typ	Max	Unit
t_{init}	Initial delay	-	1400	2200	2400	ps
t_{Δ}	Unit Delay	-	35	40	45	-

6.3.23 16-bit ADC characteristics

Unless otherwise specified, the parameters given in *Table 99* are derived from tests performed under the ambient temperature, f_{HCLK} frequency and V_{DDA} supply voltage conditions summarized in *Table 23: General operating conditions*.

Table 99. ADC characteristics(1)(2)

Symbol	Parameter	Conditions		Min	Typ	Max	Unit
V_{DDA}	Analog supply voltage for ADC ON	-		1.62	-	3.6	V
V_{REF+}	Positive reference voltage	-		1.62	-	V_{DDA}	V
V_{REF-}	Negative reference voltage	-		V_{SSA}			V
f_{ADC}	ADC clock frequency	1.62 V ≤ VDDA ≤ 3.6 V	BOOST = 11	0.12	-	50	MHz
			BOOST = 10	0.12	-	25	
			BOOST = 01	0.12	-	12.5	
			BOOST = 00	-	-	6.25	

Table 99. ADC characteristics(1)(2) (continued)

Symbol	Parameter	Conditions				Min	Typ	Max	Unit
f_s(3)	Sampling rate for Direct channels(4)	Resolution = 16 bits, V_{DDA} >2.5 V	T_J = 90 °C	f_{ADC}=36 MHz	SMP = 1.5	-	-	3.60	MSps
		Resolution = 16 bits		f_{ADC}=37 MHz	SMP = 2.5	-	-	3.35	
		Resolution = 14 bits	T_J = 125 °C	f_{ADC} = 50 MHz	SMP = 2.5	-	-	5.00	
		Resolution = 12 bits		f_{ADC} = 50 MHz	SMP = 2.5	-	-	5.50	
		Resolution = 10 bits		f_{ADC} = 50 MHz	SMP = 1.5	-	-	7.10	
		Resolution = 8 bits		f_{ADC} = 50 MHz	SMP = 1.5	-	-	8.30	
	Sampling rate for Fast channels	Resolution = 16 bits, V_{DDA} >2.5 V	T_J = 90 °C	f_{ADC}=32 MHz	SMP = 2.5	-	-	2.90	
		Resolution = 16 bits		f_{ADC}=31 MHz	SMP = 2.5	-	-	2.80	
		Resolution = 14 bits	T_J = 125 °C	f_{ADC} = 33 MHz	SMP = 2.5	-	-	3.30	
		Resolution = 12 bits		f_{ADC} = 39 MHz	SMP = 2.5	-	-	4.30	
		Resolution = 10 bits		f_{ADC} = 48 MHz	SMP = 2.5	-	-	6.00	
		Resolution = 8 bits		f_{ADC} = 50 MHz	SMP = 2.5	-	-	7.10	
	Sampling rate for Slow channels	Resolution = 16 bits	T_J = 90 °C	f_{ADC} = 10 MHz	SMP = 1.5	-	-	1.00	
		resolution = 14 bits	T_J = 125 °C			-	-		
		resolution = 12 bits				-	-		
		resolution = 10 bits				-	-		
		resolution = 8 bits				-	-		
				-	-	-	-	10	
V_{AIN}(5)	Conversion voltage range	-		-	-	0	-	V_{REF+}	V
V_{CMIV}	Common mode input voltage	-		-	-	V_{REF}/2 − 10%	V_{REF}/2	V_{REF}/2 + 10%	V
R_{AIN}(6)	External input impedance	Resolution = 16 bits, T_J = 125 °C		-	-	-	-	170	Ω
		Resolution = 14 bits, T_J = 125 °C		-	-	-	-	435	
		Resolution = 12 bits, T_J =125 °C		-	-	-	-	1150	
		Resolution = 10 bits, T_J = 125 °C		-	-	-	-	5650	
		Resolution = 8 bits, T_J = 125 °C		-	-	-	-	26500	
C_{ADC}	Internal sample and hold capacitor	-		-	-	-	4	-	pF
$t_{ADCVREG_STUP}$	ADC LDO startup time	-		-	-	-	5	10	us
t_{STAB}	ADC Power-up time	LDO already started		-	-	1	-	-	conversion cycle
t_{CAL}	Offset and linearity calibration time	-		-	-	165010	-	-	$1/f_{ADC}$
t_{OFF_CAL}	Offset calibration time	-		-	-	1280	-	-	$1/f_{ADC}$

Table 99. ADC characteristics(1)(2) (continued)

Symbol	Parameter	Conditions			Min	Typ	Max	Unit
t_{LATR}	Trigger conversion latency regular and injected channels without conversion abort	CKMODE = 00	-	-	1.5	2	2.5	$1/f_{ADC}$
		CKMODE = 01	-	-	-	-	2.5	
		CKMODE = 10	-	-	-	-	2.5	
		CKMODE = 11	-	-	-	-	2.25	
$t_{LATRINJ}$	Trigger conversion latency regular injected channels aborting a regular conversion	CKMODE = 00	-	-	2.5	3	3.5	$1/f_{ADC}$
		CKMODE = 01	-	-	-	-	3.5	
		CKMODE = 10	-	-	-	-	3.5	
		CKMODE = 11	-	-	-	-	3.25	
t_S	Sampling time	-	-	-	1.5	-	810.5	$1/f_{ADC}$
t_{CONV}	Total conversion time (including sampling time)	Resolution = N bits	-	-	ts + 0.5 + N/2	-	-	$1/f_{ADC}$
t_{TRIG}	External trigger period	Resolution = 16 bits	-	-	t_{CONV}	-	-	$1/f_{ADC}$

Table 99. ADC characteristics(1)(2) (continued)

Symbol	Parameter	Conditions			Min	Typ	Max	Unit
I_{DDA_D} (ADC)	ADC consumption on V_{DDA}, BOOST=11, Differential mode	Resolution = 16 bits, f_{ADC}=25 MHz	-	-	-	1440	-	µA
		Resolution = 14 bits, f_{ADC}=30 MHz	-	-	-	1350	-	
		Resolution = 12 bits, f_{ADC}=40 MHz	-	-	-	990	-	
	ADC consumption on V_{DDA} BOOST=10, Differential mode f_{ADC}=25 MHz	Resolution = 16 bits	-	-	-	1080	-	
		Resolution = 14 bits	-	-	-	810	-	
		Resolution = 12 bits	-	-	-	585	-	
	ADC consumption on V_{DDA} BOOST=01, Differential mode f_{ADC}=12.5 MHz	Resolution = 16 bits	-	-	-	630	-	
		Resolution = 14 bits	-	-	-	432	-	
		Resolution = 12 bits	-	-	-	315	-	
	ADC consumption on V_{DDA} BOOST=00, Differential mode f_{ADC}=6.25 MHz	Resolution = 16 bits	-	-	-	360	-	
		Resolution = 14 bits	-	-	-	270	-	
		Resolution = 12 bits	-	-	-	225	-	
I_{DDA_SE}(ADC)	ADC consumption on V_{DDA} BOOST=11, Single-ended mode	Resolution = 16 bits, f_{ADC}=25 MHz	-	-	-	720	-	
		Resolution = 14 bits, f_{ADC}=30 MHz	-	-	-	675	-	
		Resolution = 12 bits, f_{ADC}=40 MHz	-	-	-	495	-	
	ADC consumption on V_{DDA} BOOST=10, Singl-ended mode f_{ADC}=25 MHz	Resolution = 16 bits	-	-	-	540	-	
		Resolution = 14 bits	-	-	-	405	-	
		Resolution = 12 bits	-	-	-	292.5	-	
	ADC consumption on V_{DDA} BOOST=01, Single-ended mode f_{ADC}=12.5 MHz	Resolution = 16 bits	-	-	-	315	-	
		Resolution = 14 bits	-	-	-	216	-	
		Resolution = 12 bits	-	-	-	157.5	-	
	ADC consumption on V_{DDA} BOOST=00, Single-ended mode f_{ADC}=6.25 MHz	Resolution = 16 bits	-	-	-	180	-	
		Resolution = 14 bits	-	-	-	135	-	
		Resolution = 12 bits	-	-	-	112.5	-	
I_{DD} (ADC)	ADC consumption on V_{DD}	f_{ADC}=50 MHz	-	-	-	400	-	
		f_{ADC}=25 MHz	-	-	-	220	-	
		f_{ADC}=12.5 MHz	-	-	-	180	-	
		f_{ADC}=6.25 MHz	-	-	-	120	-	
		f_{ADC}=3.125 MHz	-	-	-	80	-	

1. Guaranteed by design.
2. The voltage booster on ADC switches must be used for VDDA < 2.4 V (embedded I/O switches).
3. These values are valid for UFBGA169 and one ADC. Refer to *Getting started with the STM32H7 Series MCU 16-bit ADC (*AN5354) for values of other packages and multiple ADCs operation.
4. Direct channels are connected to analog I/Os (PA0_C, PA1_C, PC2_C and PC3_C) to optimize ADC performance.
5. Depending on the package, V_{REF+} can be internally connected to V_{DDA} and V_{REF-} to V_{SSA}.
6. The tolerance is 10 LSBs for 16-bit resolution, 4 LSBs for 14-bit resolution, and 2 LSBs for 12-bit, 10-bit and 8-bit resolutions.

Table 100. Minimum sampling time vs R_{AIN}(1)(2)

Resolution	RAIN (Ω)	Minimum sampling time (s)		
		Direct channels(3)	Fast channels(4)	Slow channels(5)
16 bits	47	7.37E-08	1.14E-07	1.72E-07
14 bits	47	6.29E-08	9.74E-08	1.55E-07
	68	6.84E-08	1.02E-07	1.58E-07
	100	7.80E-08	1.12E-07	1.62E-07
	150	9.86E-08	1.32E-07	1.80E-07
	220	1.32E-07	1.61E-07	2.01E-07
12 bits	47	5.32E-08	8.00E-08	1.29E-07
	68	5.74E-08	8.50E-08	1.32E-07
	100	6.58E-08	9.31E-08	1.40E-07
	150	8.37E-08	1.10E-07	1.51E-07
	220	1.11E-07	1.34E-07	1.73E-07
	330	1.56E-07	1.78E-07	2.14E-07
	470	2.16E-07	2.39E-07	2.68E-07
	680	3.01E-07	3.29E-07	3.54E-07
10 bits	47	4.34E-08	6.51E-08	1.08E-07
	68	4.68E-08	6.89E-08	1.11E-07
	100	5.35E-08	7.55E-08	1.16E-07
	150	6.68E-08	8.77E-08	1.26E-07
	220	8.80E-08	1.08E-07	1.40E-07
	330	1.24E-07	1.43E-07	1.71E-07
	470	1.69E-07	1.89E-07	2.13E-07
	680	2.38E-07	2.60E-07	2.80E-07
	1000	3.45E-07	3.66E-07	3.84E-07
	1500	5.15E-07	5.35E-07	5.48E-07
	2200	7.42E-07	7.75E-07	7.78E-07
	3300	1.10E-06	1.14E-06	1.14E-06

Table 100. Minimum sampling time vs R_{AIN}(1)(2) (continued)

Resolution	RAIN (Ω)	Minimum sampling time (s)		
		Direct channels(3)	Fast channels(4)	Slow channels(5)
8 bits	47	3.32E-08	5.10E-08	8.61E-08
	68	3.59E-08	5.35E-08	8.83E-08
	100	4.10E-08	5.83E-08	9.22E-08
	150	5.06E-08	6.76E-08	9.95E-08
	220	6.61E-08	8.22E-08	1.11E-07
	330	9.17E-08	1.08E-07	1.32E-07
	470	1.24E-07	1.40E-07	1.63E-07
	680	1.74E-07	1.91E-07	2.12E-07
	1000	2.53E-07	2.70E-07	2.85E-07
	1500	3.73E-07	3.93E-07	4.05E-07
	2200	5.39E-07	5.67E-07	5.75E-07
	3300	8.02E-07	8.36E-07	8.38E-07
	4700	1.13E-06	1.18E-06	1.18E-06
	6800	1.62E-06	1.69E-06	1.68E-06
	10000	2.36E-06	2.47E-06	2.45E-06
	15000	3.50E-06	3.69E-06	3.65E-06

1. Guaranteed by design.
2. Data valid at up to 125 °C, with a 47 pF PCB capacitor, and V_{DDA}=1.6 V.
3. Direct channels are connected to analog I/Os (PA0_C, PA1_C, PC2_C and PC3_C) to optimize ADC performance.
4. Fast channels correspond to PF3, PF5, PF7, PF9, PA6, PC4, PB1, PF11 and PF13.
5. Slow channels correspond to all ADC inputs except for the Direct and Fast channels.

Table 101. ADC accuracy(1)(2)

Symbol	Parameter	Conditions(3)		Min	Typ	Max	Unit
ET	Total undadjusted error	Direct channel	Single ended	-	+10/–20	-	LSB
			Differential	-	±15	-	
		Fast channel	Single ended	-	+10/–20	-	
			Differential	-	±15	-	
		Slow channel	Single ended	-	±10	-	
			Differential	-	±10	-	
EO	Offset error	-		-	±10	-	
EG	Gain error	-		-	±15	-	
ED	Differential linearity error	Single ended		-	+3/–1	-	
		Differential		-	+4.5/–1	-	
EL	Integral linearity error	Direct channel	Single ended	-	±11	-	
			Differential	-	±7	-	
		Fast channel	Single ended	-	±13	-	
			Differential	-	±7	-	
		Slow channel	Single ended	-	±10	-	
			Differential	-	±6	-	
ENOB	Effective number of bits	Single ended		-	12.2	-	Bits
		Differential		-	13.2	-	
SINAD	Signal-to-noise and distortion ratio	Single ended		-	75.2	-	dB
		Differential		-	81.2	-	
SNR	Signal-to-noise ratio	Single ended		-	77.0	-	
		Differential		-	81.0	-	
THD	Total harmonic distortion	Single ended		-	87	-	
		Differential		-	90	-	

1. Data guaranteed by characterization for BGA packages. The values for LQFP packages might differ.
2. ADC DC accuracy values are measured after internal calibration.
3. ADC clock frequency = 25 MHz, ADC resolution = 16 bits, V_{DDA}=V_{REF+}=3.3 V and BOOST=11.

Note: ADC accuracy vs. negative injection current: injecting a negative current on any analog input pins should be avoided as this significantly reduces the accuracy of the conversion being performed on another analog input. It is recommended to add a Schottky diode (pin to ground) to analog pins which may potentially inject negative currents.

Any positive injection current within the limits specified for $I_{INJ(PIN)}$ and $\Sigma I_{INJ(PIN)}$ in *Section 6.3.17* does not affect the ADC accuracy.

Figure 42. ADC accuracy characteristics

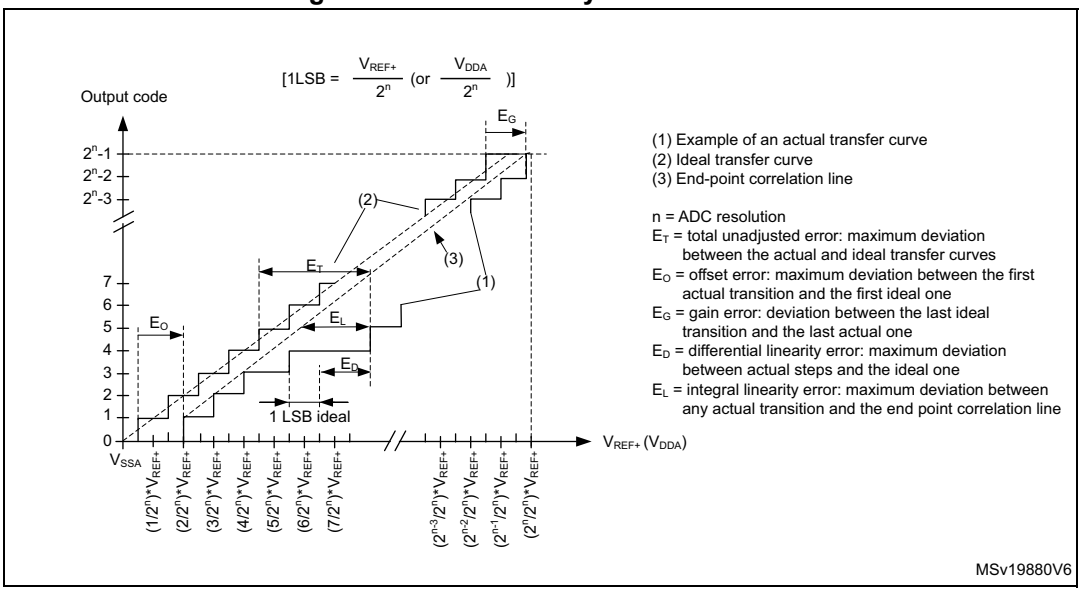

Figure 43. Typical connection diagram when using the ADC with FT/TT pins featuring analog switch function

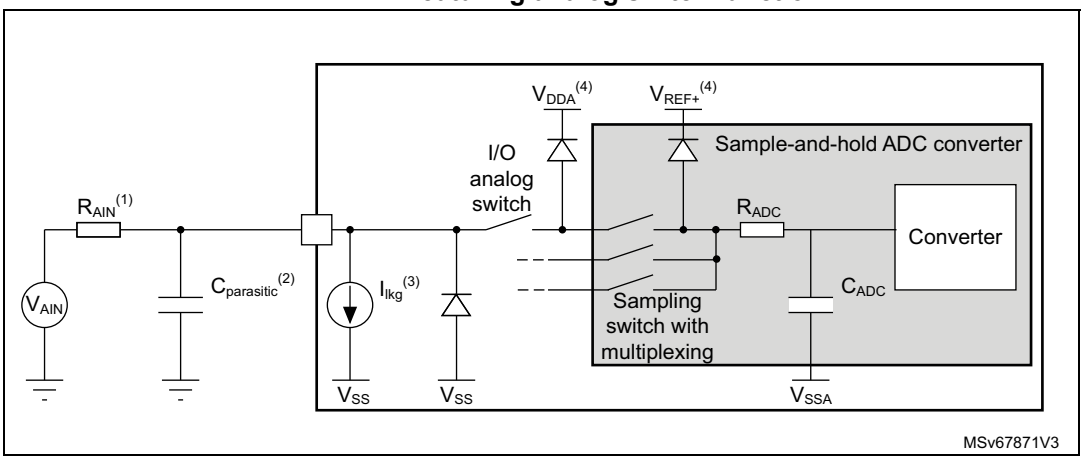

1. Refer to *Section 6.3.23: 16-bit ADC characteristics* for the values of R_{AIN} and C_{ADC}.
2. $C_{parasitic}$ represents the capacitance of the PCB (dependent on soldering and PCB layout quality) plus the pad capacitance (refer to *Table 72: I/O static characteristics* for the value of the pad capacitance). A high $C_{parasitic}$ value downgrades conversion accuracy. To remedy this, f_{ADC} should be reduced.
3. Refer to *Table 72: I/O static characteristics* for the value of I_{lkg}.
4. Refer to *Figure 13: Power supply scheme*.

General PCB design guidelines

Power supply decoupling should be performed as shown in *Figure 44* or *Figure 45*, depending on whether V_{REF+} is connected to V_{DDA} or not. The 100 nF capacitors should be ceramic (good quality). They should be placed them as close as possible to the chip.

Figure 44. Power supply and reference decoupling (V_{REF+} not connected to V_{DDA})

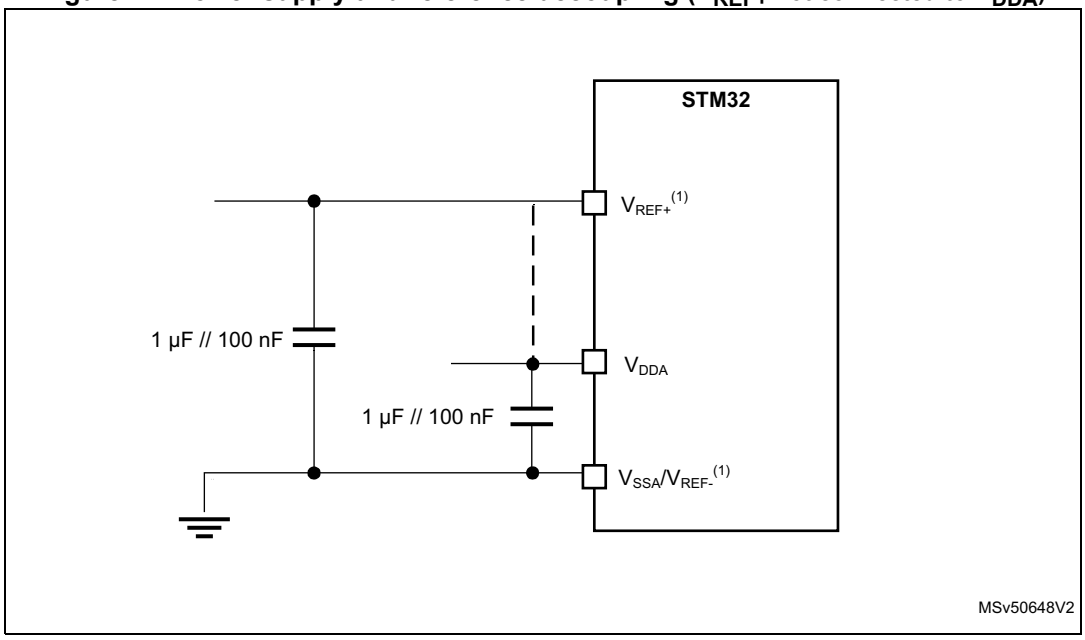

1. V_{REF+} input is available on all package whereas the V_{REF-} s available only on UFBGA176+25 and TFBGA240+25. When V_{REF-} is not available, it is internally connected to V_{DDA} and V_{SSA}.

Figure 45. Power supply and reference decoupling (V_{REF+} connected to V_{DDA})

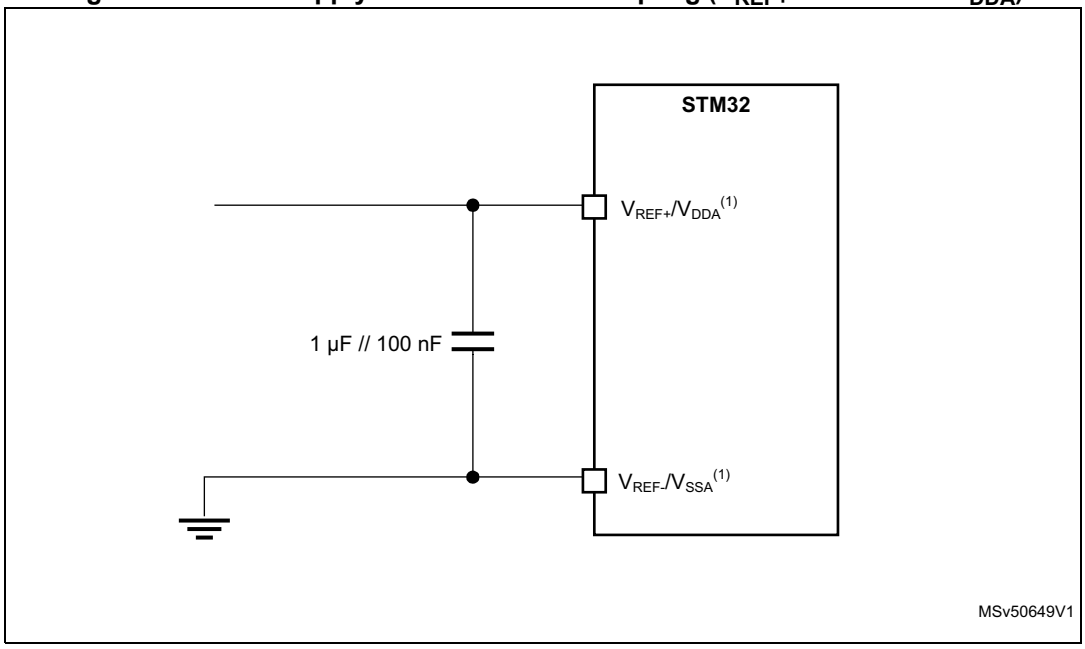

1. V_{REF+} input is available on all package whereas the V_{REF-} s available only on UFBGA176+25 and TFBGA240+25. When V_{REF-} is not available, it is internally connected to V_{DDA} and V_{SSA}.

6.3.24 DAC characteristics

Table 102. DAC characteristics(1)(2)

Symbol	Parameter	Conditions		Min	Typ	Max	Unit
V_{DDA}	Analog supply voltage	-		1.8	3.3	3.6	V
V_{REF+}	Positive reference voltage	-		1.80	-	V_{DDA}	
V_{REF-}	Negative reference voltage	-		-	V_{SSA}	-	
R_L	Resistive Load	DAC output buffer ON	connected to V_{SSA}	5	-	-	kΩ
			connected to V_{DDA}	25	-	-	
R_O	Output Impedance	DAC output buffer OFF		10.3	13	16	
R_{BON}	Output impedance sample and hold mode, output buffer ON	DAC output buffer ON	V_{DD} = 2.7 V	-	-	1.6	kΩ
			V_{DD} = 2.0 V	-	-	2.6	
R_{BOFF}	Output impedance sample and hold mode, output buffer OFF	DAC output buffer OFF	V_{DD} = 2.7 V	-	-	17.8	kΩ
			V_{DD} = 2.0 V	-	-	18.7	
C_L	Capacitive Load	DAC output buffer OFF		-	-	50	pF
C_{SH}		Sample and Hold mode		-	0.1	1	µF
V_{DAC_OUT}	Voltage on DAC_OUT output	DAC output buffer ON		0.2	-	V_{REF+} −0.2	V
		DAC output buffer OFF		0	-	V_{REF+}	
$t_{SETTLING}$	Settling time (full scale: for a 12-bit code transition between the lowest and the highest input codes when DAC_OUT reaches the final value of ±0.5LSB, ±1LSB, ±2LSB, ±4LSB, ±8LSB)	Normal mode, DAC output buffer ON, $C_L \leq$ 50 pF, $R_L \geq$ 5 kΩ	±0.5 LSB	-	2.05	-	µs
			±1 LSB	-	1.97	-	
			±2 LSB	-	1.67	-	
			±4 LSB	-	1.66	-	
			±8 LSB	-	1.65	-	
		Normal mode, DAC output buffer OFF, ±1LSB C_L=10 pF		-	1.7	2	
t_{WAKEUP}(3)	Wakeup time from off state (setting the ENx bit in the DAC Control register) until the final value of ±1LSB is reached	Normal mode, DAC output buffer ON, $C_L \leq$ 50 pF, R_L = 5 kΩ		-	5	7.5	µs
		Normal mode, DAC output buffer OFF, $C_L \leq$ 10 pF		-	2	5	
PSRR	DC V_{DDA} supply rejection ratio	Normal mode, DAC output buffer ON, $C_L \leq$ 50 pF, R_L = 5 kΩ		-	−80	−28	dB

Table 102. DAC characteristics(1)(2) (continued)

Symbol	Parameter	Conditions		Min	Typ	Max	Unit
t_{SAMP}	Sampling time in Sample and Hold mode C_L=100 nF (code transition between the lowest input code and the highest input code when DAC_OUT reaches the ±1LSB final value)	MODE<2:0>_V12=100/101 (BUFFER ON)		-	0.7	2.6	ms
		MODE<2:0>_V12=110 (BUFFER OFF)		-	11.5	18.7	
		MODE<2:0>_V12=111 (INTERNAL BUFFER OFF)		-	0.3	0.6	µs
C_{lint}	Internal sample and hold capacitor	-		1.8	2.2	2.6	pF
t_{TRIM}	Middle code offset trim time	Minimum time to verify the each code		50	-	-	µs
V_{offset}	Middle code offset for 1 trim code step	V_{REF+} = 3.6 V		-	850	-	µV
		V_{REF+} = 1.8 V		-	425	-	
$I_{DDA(DAC)}$	DAC quiescent consumption from V_{DDA}	DAC output buffer ON	No load, middle code (0x800)	-	360	-	µA
			No load, worst code (0xF1C)	-	490	-	
		DAC output buffer OFF	No load, middle/worst code (0x800)	-	20	-	
		Sample and Hold mode, C_{SH}=100 nF		-	$360*T_{ON}/(T_{ON}+T_{OFF})$ (4)	-	
I_{DDV}(DAC)	DAC consumption from V_{REF+}	DAC output buffer ON	No load, middle code (0x800)	-	170	-	
			No load, worst code (0xF1C)	-	170	-	
		DAC output buffer OFF	No load, middle/worst code (0x800)	-	160	-	
		Sample and Hold mode, Buffer ON, C_{SH}=100 nF (worst code)		-	$170*T_{ON}/(T_{ON}+T_{OFF})$ (4)	-	
		Sample and Hold mode, Buffer OFF, C_{SH}=100 nF (worst code)		-	$160*T_{ON}/(T_{ON}+T_{OFF})$ (4)	-	

1. Guaranteed by design unless otherwise specified.

2. TBD stands for “to be defined”.
3. In buffered mode, the output can overshoot above the final value for low input code (starting from the minimum value).
4. T_{ON} is the refresh phase duration, while T_{OFF} is the hold phase duration. Refer to the product reference manual for more details.

Table 103. DAC accuracy(1)

Symbol	Parameter	Conditions		Min	Typ	Max	Unit
DNL	Differential non linearity(2)	DAC output buffer ON		−2	-	2	LSB
		DAC output buffer OFF		−2	-	2	
-	Monotonicity	10 bits		-	-	-	-
INL	Integral non linearity(3)	DAC output buffer ON, $C_L \leq 50$ pF, $R_L \geq 5$ kΩ		−4	-	4	LSB
		DAC output buffer OFF, $C_L \leq 50$ pF, no R_L		−4	-	4	
Offset	Offset error at code 0x800 (3)	DAC output buffer ON, $C_L \leq 50$ pF, $R_L \geq 5$ kΩ	$V_{REF+} = 3.6$ V	-	-	±15	LSB
			$V_{REF+} = 1.8$ V	-	-	±30	
		DAC output buffer OFF, $C_L \leq 50$ pF, no R_L		-	-	±8	
Offset1	Offset error at code 0x001(4)	DAC output buffer OFF, $C_L \leq 50$ pF, no R_L		-	-	±5	LSB
OffsetCal	Offset error at code 0x800 after factory calibration	DAC output buffer ON, $C_L \leq 50$ pF, $R_L \geq 5$ kΩ	$V_{REF+} = 3.6$ V	-	-	±6	LSB
			$V_{REF+} = 1.8$ V	-	-	±7	
Gain	Gain error(5)	DAC output buffer ON,$C_L \leq 50$ pF, $R_L \geq 5$ kΩ		-	-	±1	%
		DAC output buffer OFF, $C_L \leq 50$ pF, no R_L		-	-	±1	
SNR	Signal-to-noise ratio(6)	DAC output buffer ON,$C_L \leq 50$ pF, $R_L \geq 5$ kΩ , 1 kHz, BW = 500 KHz		-	67.8	-	dB
		DAC output buffer OFF, $C_L \leq 50$ pF, no R_L,1 kHz, BW = 500 KHz		-	67.8	-	
THD	Total harmonic distortion(6)	DAC output buffer ON, $C_L \leq 50$ pF, $R_L \geq 5$ kΩ , 1 kHz		-	−78.6	-	dB
		DAC output buffer OFF, $C_L \leq 50$ pF, no R_L, 1 kHz		-	−78.6	-	
SINAD	Signal-to-noise and distortion ratio(6)	DAC output buffer ON, $C_L \leq 50$ pF, $R_L \geq 5$ kΩ , 1 kHz		-	67.5	-	dB
		DAC output buffer OFF, $C_L \leq 50$ pF, no R_L, 1 kHz		-	67.5	-	

Table 103. DAC accuracy(1) (continued)

Symbol	Parameter	Conditions	Min	Typ	Max	Unit
ENOB	Effective number of bits	DAC output buffer ON, $C_L \leq 50$ pF, $R_L \geq 5$ kΩ , 1 kHz	-	10.9	-	bits
		DAC output buffer OFF, $C_L \leq 50$ pF, no R_L, 1 kHz	-	10.9	-	

1. Guaranteed by characterization.
2. Difference between two consecutive codes minus 1 LSB.
3. Difference between the value measured at Code i and the value measured at Code i on a line drawn between Code 0 and last Code 4095.
4. Difference between the value measured at Code (0x001) and the ideal value.
5. Difference between the ideal slope of the transfer function and the measured slope computed from code 0x000 and 0xFFF when the buffer is OFF, and from code giving 0.2 V and (V_{REF+} - 0.2 V) when the buffer is ON.
6. Signal is −0.5dBFS with $F_{sampling}$=1 MHz.

Figure 46. 12-bit buffered /non-buffered DAC

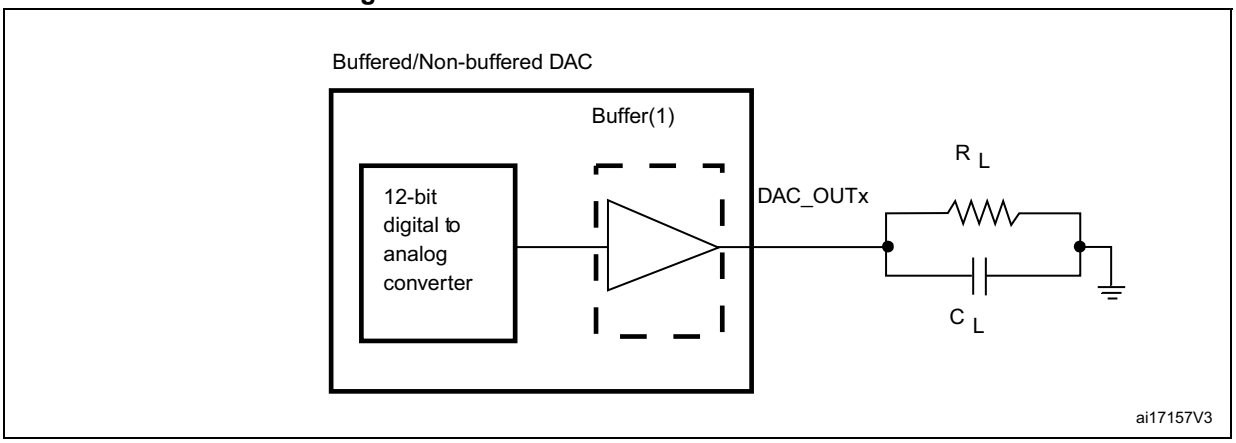

1. The DAC integrates an output buffer that can be used to reduce the output impedance and to drive external loads directly without the use of an external operational amplifier. The buffer can be bypassed by configuring the BOFFx bit in the DAC_CR register.

6.3.25 Voltage reference buffer characteristics

Table 104. VREFBUF characteristics(1)

Symbol	Parameter	Conditions		Min	Typ	Max	Unit
V_{DDA}	Analog supply voltage	Normal mode	VSCALE = 000	2.8	3.3	3.6	V
			VSCALE = 001	2.4	-	3.6	
			VSCALE = 010	2.1	-	3.6	
			VSCALE = 011	1.8	-	3.6	
		Degraded mode	VSCALE = 000	1.62	-	2.80	
			VSCALE = 001	1.62	-	2.40	
			VSCALE = 010	1.62	-	2.10	
			VSCALE = 011	1.62	-	1.80	
V_{REFBUF_OUT}	Voltage Reference Buffer Output, at 30 °C, I_{load}= 100 µA	Normal mode	VSCALE = 000	2.498	2.5	2.5035	
			VSCALE = 001	2.046	2.049	2.052	
			VSCALE = 010	1.801	1.804	1.806	
			VSCALE = 011	1.4995	1.5015	1.504	
		Degraded mode(2)	VSCALE = 000	V_{DDA}− 150 mV	-	V_{DDA}	
			VSCALE = 001	V_{DDA}− 150 mV	-	V_{DDA}	
			VSCALE = 010	V_{DDA}− 150 mV	-	V_{DDA}	
			VSCALE = 011	V_{DDA}− 150 mV	-	V_{DDA}	
TRIM	Trim step resolution	-	-	-	±0.05	±0.1	%
C_L	Load capacitor	-	-	0.5	1	1.50	uF
esr	Equivalent Serial Resistor of C_L	-	-	-	-	2	Ω
I_{load}	Static load current	-	-	-	-	4	mA
I_{line_reg}	Line regulation	2.8 V ≤ V_{DDA} ≤ 3.6 V	I_{load} = 500 µA	-	200	-	ppm/V
			I_{load} = 4 mA	-	100	-	
I_{load_reg}	Load regulation	500 µA ≤ I_{LOAD} ≤ 4 mA	Normal Mode	-	50	-	ppm/ mA
T_{coeff}	Temperature coefficient	−40 °C < T_J < +125 °C		-	-	T_{coeff} V_{REFINT} + 100	ppm/ °C
PSRR	Power supply rejection	DC	-	-	60	-	dB
		100KHz	-	-	40	-	

Table 104. VREFBUF characteristics(1) (continued)

Symbol	Parameter	Conditions		Min	Typ	Max	Unit
t_{START}	Start-up time	C_L=0.5 µF	-	-	300	-	µs
		C_L=1 µF	-	-	500	-	
		C_L=1.5 µF	-	-	650	-	
I_{INRUSH}	Control of maximum DC current drive on V_{REFBUF_OUT} during startup phase(3)	-		-	8	-	mA
$I_{DDA(VREFBUF)}$	VREFBUF consumption from V_{DDA}	I_{LOAD} = 0 µA	-	-	15	25	µA
		I_{LOAD} = 500 µA	-	-	16	30	
		I_{LOAD} = 4 mA	-	-	32	50	

1. Guaranteed by design.
2. In degraded mode, the voltage reference buffer cannot accurately maintain the output voltage (V_{DDA}−drop voltage).
3. To properly control VREFBUF I_{INRUSH} current during the startup phase and the change of scaling, V_{DDA} voltage should be in the range of 1.8 V-3.6 V, 2.1 V-3.6 V, 2.4 V-3.6 V and 2.8 V-3.6 V for VSCALE = 011, 010, 001 and 000, respectively.

6.3.26 Temperature sensor characteristics

Table 105. Temperature sensor characteristics

Symbol	Parameter	Min	Typ	Max	Unit
T_L(1)	V_{SENSE} linearity with temperature	-	-	±3	°C
Avg_Slope(2)	Average slope	-	2	-	mV/°C
V_{30}(3)	Voltage at 30°C ± 5 °C	-	0.62	-	V
t_{start_run}	Startup time in Run mode (buffer startup)	-	-	25.2	µs
t_{S_temp}(1)	ADC sampling time when reading the temperature	9	-	-	
I_{sens}(1)	Sensor consumption	-	0.18	0.31	µA
$I_{sensbuf}$(1)	Sensor buffer consumption	-	3.8	6.5	

1. Guaranteed by design.
2. Guaranteed by characterization.
3. Measured at V_{DDA} = 3.3 V ± 10 mV. The V_{30} ADC conversion result is stored in the TS_CAL1 byte.

Table 106. Temperature sensor calibration values

Symbol	Parameter	Memory address
TS_CAL1	Temperature sensor raw data acquired value at 30 °C, V_{DDA} = 3.3 V	0x1FF1 E820 -0x1FF1 E821
TS_CAL2	Temperature sensor raw data acquired value at 130 °C, V_{DDA} = 3.3 V	0x1FF1 E840 - 0x1FF1 E841

6.3.27 Temperature and V_{BAT} monitoring

Table 107. V_{BAT} monitoring characteristics

Symbol	Parameter	Min	Typ	Max	Unit
R	Resistor bridge for V_{BAT}	-	26	-	KΩ
Q	Ratio on V_{BAT} measurement	-	4	-	-
Er(1)	Error on Q	–10	-	+10	%
t_{S_vbat}(1)	ADC sampling time when reading V_{BAT} input	9	-	-	µs
$V_{BAThigh}$	High supply monitoring	-	3.55	-	V
V_{BATlow}	Low supply monitoring	-	1.36	-	

1. Guaranteed by design.

Table 108. V_{BAT} charging characteristics

Symbol	Parameter	Condition	Min	Typ	Max	Unit
R_{BC}	Battery charging resistor	VBRS in PWR_CR3= 0	-	5	-	KΩ
		VBRS in PWR_CR3= 1	-	1.5	-	

Table 109. Temperature monitoring characteristics

Symbol	Parameter	Min	Typ	Max	Unit
$TEMP_{high}$	High temperature monitoring	-	117	-	°C
$TEMP_{low}$	Low temperature monitoring	-	–25	-	

6.3.28 Voltage booster for analog switch

Table 110. Voltage booster for analog switch characteristics(1)

Symbol	Parameter	Condition	Min	Typ	Max	Unit
V_{DD}	Supply voltage	-	1.62	2.6	3.6	V
$t_{SU(BOOST)}$	Booster startup time	-	-	-	50	µs
$I_{DD(BOOST)}$	Booster consumption	$1.62\ V \le V_{DD} \le 2.7\ V$	-	-	125	µA
		$2.7\ V < V_{DD} < 3.6\ V$	-	-	250	

1. Guaranteed by characterization results.

6.3.29 Comparator characteristics

Table 111. COMP characteristics[1]

Symbol	Parameter	Conditions		Min	Typ	Max	Unit
V_{DDA}	Analog supply voltage	-		1.62	3.3	3.6	V
V_{IN}	Comparator input voltage range	-		0	-	V_{DDA}	V
V_{BG}	Scaler input voltage	-			[2]		V
V_{SC}	Scaler offset voltage	-		-	±5	±10	mV
$I_{DDA(SCALER)}$	Scaler static consumption from V_{DDA}	BRG_EN=0 (bridge disable)		-	0.2	0.3	µA
		BRG_EN=1 (bridge enable)		-	0.8	1	
t_{START_SCALER}	Scaler startup time	-		-	140	250	µs
t_{START}	Comparator startup time to reach propagation delay specification	High-speed mode		-	2	5	µs
		Medium mode		-	5	20	
		Ultra-low-power mode		-	15	80	
t_D[3]	Propagation delay for 200 mV step with 100 mV overdrive	High-speed mode		-	50	80	ns
		Medium mode		-	0.5	1.2	µs
		Ultra-low-power mode		-	2.5	7	
	Propagation delay for step > 200 mV with 100 mV overdrive only on positive inputs	High-speed mode		-	50	120	ns
		Medium mode		-	0.5	1.2	µs
		Ultra-low-power mode		-	2.5	7	
V_{offset}	Comparator offset error	Full common mode range		-	±5	±20	mV
V_{hys}	Comparator hysteresis	No hysteresis		-	0	-	mV
		Low hysteresis		5	10	22	
		Medium hysteresis		8	20	37	
		High hysteresis		16	30	52	
I_{DDA}(COMP)	Comparator consumption from V_{DDA}	Ultra-low-power mode	Static	-	400	600	nA
			With 50 kHz ±100 mV overdrive square signal	-	800	-	
		Medium mode	Static	-	5	7	µA
			With 50 kHz ±100 mV overdrive square signal	-	6	-	
		High-speed mode	Static	-	70	100	
			With 50 kHz ±100 mV overdrive square signal	-	75	-	

1. Guaranteed by design, unless otherwise specified.
2. Refer to *Table 30: Embedded reference voltage*.

3. Guaranteed by characterization results.

6.3.30 Operational amplifier characteristics

Table 112. Operational amplifier characteristics

Symbol	Parameter	Conditions	Min	Typ	Max	Unit
V_{DDA}	Analog supply voltage Range	-	2	3.3	3.6	V
CMIR	Common Mode Input Range	-	0	-	V_{DDA}	
VI_{OFFSET}	Input offset voltage	25°C, no load on output	-	-	±1.5	mV
		All voltages and temperature, no load	-	-	±2.5	
ΔVI_{OFFSET}	Input offset voltage drift	-	-	±3.0	-	µV/°C
TRIMOFFSETP TRIMLPOFFSETP	Offset trim step at low common input voltage ($0.1*V_{DDA}$)	-	-	1.1	1.5	mV
TRIMOFFSETN TRIMLPOFFSETN	Offset trim step at high common input voltage ($0.9*V_{DDA}$)	-	-	1.1	1.5	
I_{LOAD}	Drive current	-	-	-	500	µA
I_{LOAD_PGA}	Drive current in PGA mode	-	-	-	270	
C_{LOAD}	Capacitive load	-	-	-	50	pF
CMRR	Common mode rejection ratio	-	-	80	-	dB
PSRR	Power supply rejection ratio	$C_{LOAD} \leq 50pf$ / $R_{LOAD} \geq 4\ k\Omega$(1) at 1 kHz, $V_{com}=V_{DDA}/2$	50	66	-	dB
GBW	Gain bandwidth for high supply range	200 mV ≤ Output dynamic range ≤ V_{DDA} - 200 mV	4	7.3	12.3	MHz
SR	Slew rate (from 10% and 90% of output voltage)	Normal mode	-	3	-	V/µs
		High-speed mode	-	30	-	
AO	Open loop gain	200 mV ≤ Output dynamic range ≤ V_{DDA} - 200 mV	59	90	129	dB
φm	Phase margin	-	-	55	-	°
GM	Gain margin	-	-	12	-	dB
V_{OHSAT}	High saturation voltage	I_{load}=max or R_{LOAD}=min, Input at V_{DDA}	V_{DDA} −100 mV	-	-	mV
V_{OLSAT}	Low saturation voltage	I_{load}=max or R_{LOAD}=min, Input at 0 V	-	-	100	

Table 112. Operational amplifier characteristics (continued)

Symbol	Parameter	Conditions		Min	Typ	Max	Unit
t_{WAKEUP}	Wake up time from OFF state	Normal mode	C_{LOAD} ≤ 50pf, R_{LOAD} ≥ 4 kΩ, follower configuration	-	0.8	3.2	µs
		High speed mode	C_{LOAD} ≤ 50pf, R_{LOAD} ≥ 4 kΩ, follower configuration	-	0.9	2.8	
PGA gain	Non inverting gain error value	PGA gain = 2		−1	-	1	%
		PGA gain = 4		−2	-	2	
		PGA gain = 8		−2.5	-	2.5	
		PGA gain = 16		−3	-	3	
	Inverting gain error value	PGA gain = 2		−1	-	1	
		PGA gain = 4		−1	-	1	
		PGA gain = 8		−2	-	2	
		PGA gain = 16		−3	-	3	
	External non-inverting gain error value	PGA gain = 2		−1	-	1	
		PGA gain = 4		−3	-	3	
		PGA gain = 8		−3.5	-	3.5	
		PGA gain = 16		−4	-	4	
$R_{network}$	R2/R1 internal resistance values in non-inverting PGA mode(2)	PGA Gain=2		-	10/10	-	kΩ/ kΩ
		PGA Gain=4		-	30/10	-	
		PGA Gain=8		-	70/10	-	
		PGA Gain=16		-	150/10	-	
	R2/R1 internal resistance values in inverting PGA mode(2)	PGA Gain = -1		-	10/10	-	
		PGA Gain = -3		-	30/10	-	
		PGA Gain = -7		-	70/10	-	
		PGA Gain = -15		-	150/10	-	
Delta R	Resistance variation (R1 or R2)	-		−15	-	15	%

Table 112. Operational amplifier characteristics (continued)

Symbol	Parameter	Conditions		Min	Typ	Max	Unit
PGA BW	PGA bandwidth for different non inverting gain	Gain=2		-	GBW/2	-	MHz
		Gain=4		-	GBW/4	-	
		Gain=8		-	GBW/8	-	
		Gain=16		-	GBW/16	-	
	PGA bandwidth for different inverting gain	Gain = -1		-	5.00	-	MHz
		Gain = -3		-	3.00	-	
		Gain = -7		-	1.50	-	
		Gain = -15		-	0.80	-	
en	Voltage noise density	at 1 KHz	output loaded with 4 kΩ	-	140	-	nV/√Hz
		at 10 KHz		-	55	-	
$I_{DDA(OPAMP)}$	OPAMP consumption from V_{DDA}	Normal mode	no Load, quiescent mode, follower	-	570	1000	µA
		High-speed mode		-	610	1200	

1. R_{LOAD} is the resistive load connected to VSSA or to VDDA.
2. R2 is the internal resistance between the OPAMP output and th OPAMP inverting input. R1 is the internal resistance between the OPAMP inverting input and ground. PGA gain = 1 + R2/R1.

6.3.31 Digital filter for Sigma-Delta Modulators (DFSDM) characteristics

Unless otherwise specified, the parameters given in *Table 113* for DFSDM are derived from tests performed under the ambient temperature, fPCLKx frequency and supply voltage conditions summarized in *Table 23: General operating conditions*.

- Output speed is set to OSPEEDRy[1:0] = 10
- Capacitive load C_L = 30 pF
- Measurement points are done at CMOS levels: $0.5V_{DD}$
- VOS level set to VOS1

Refer to *Section 6.3.18: I/O port characteristics* for more details on the input/output alternate function characteristics (DìFSDM_CKINx, DFSDM_DATINx, DFSDM_CKOUT for DFSDM).

Table 113. DFSDM measured timing - 1.62-3.6 V

Symbol	Parameter	Conditions		Min	Typ	Max	Unit
$f_{DFSDMCLK}$	DFSDM clock	$1.62 < V_{DD} < 3.6$ V		-	-	250	MHz
f_{CKIN} ($1/T_{CKIN}$)	Input clock frequency	SPI mode (SITP[1:0]=0,1), External clock mode (SPICKSEL[1:0]=0), $1.62 < V_{DD} < 3.6$ V		-	-	20	
		SPI mode (SITP[1:0]=0,1), External clock mode (SPICKSEL[1:0]=0), $2.7 < V_{DD} < 3.6$ V		-	-	20	
		SPI mode (SITP[1:0]=0,1), Internal clock mode (SPICKSEL[1:0]'0), $1.62 < V_{DD} < 3.6$ V		-	-	20	
		SPI mode (SITP[1:0]=0,1), Internal clock mode (SPICKSEL[1:0]'0), $2.7 < V_{DD} < 3.6$ V		-	-	20	
f_{CKOUT}	Output clock frequency	$1.62 < V_{DD} < 3.6$ V		-	-	20	
$DuCy_{CK OUT}$	Output clock frequency duty cycle	$1.62 < V_{DD} < 3.6$ V	Even division, CKOUTDIV[7:0] = 1, 3, 5...	45	50	55	%
			Odd division, CKOUTDIV[7:0] = 2, 4, 6...	(((n/2+1)/(n+1)) *100)–5	(((n/2+1)/(n+1)) *100)	(((n/2+1)/(n+1)) *100)+5	
$t_{wh(CKIN)}$ $t_{wl(CKIN)}$	Input clock high and low time	SPI mode (SITP[1:0]=0,1), External clock mode (SPICKSEL[1:0]=0), $1.62 < V_{DD} < 3.6$ V		$T_{CKIN}/2-0.5$	$T_{CKIN}/2$	-	ns
t_{su}	Data input setup time	SPI mode (SITP[1:0]=0,1), External clock mode (SPICKSEL[1:0]=0), $1.62 < V_{DD} < 3.6$ V		1.5	-	-	
t_h	Data input hold time	SPI mode (SITP[1:0]=0,1), External clock mode (SPICKSEL[1:0]=0), $1.62 < V_{DD} < 3.6$ V		0.5	-	-	
$T_{Manchester}$	Manchester data period (recovered clock period)	Manchester mode (SITP[1:0]=2,3), Internal clock mode (SPICKSEL[1:0]'0), $1.62 < V_{DD} < 3.6$ V		(CKOUTDIV+1) * $T_{DFSDMCLK}$	-	(2*CKOUTDIV) * $T_{DFSDMCLK}$	

Figure 47. Channel transceiver timing diagrams

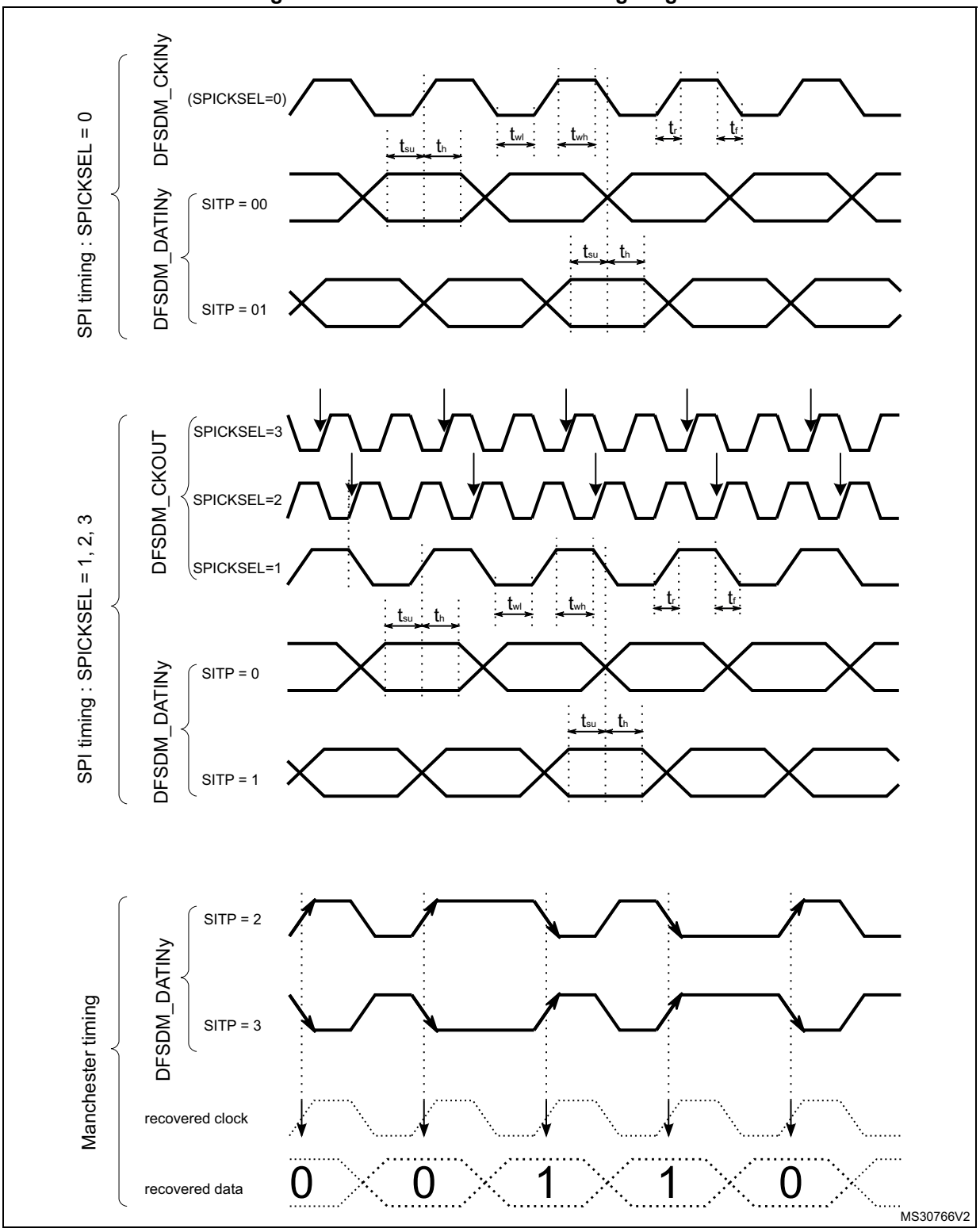

6.3.32 Camera interface (DCMI) timing specifications

Unless otherwise specified, the parameters given in *Table 114* for DCMI are derived from tests performed under the ambient temperature, f_{HCLK} frequency and VDD supply voltage summarized in *Table 23: General operating conditions*, with the following configuration:

- DCMI_PIXCLK polarity: falling
- DCMI_VSYNC and DCMI_HSYNC polarity: high
- Data formats: 14 bits
- Capacitive load C_L=30 pF
- Measurement points are done at CMOS levels: $0.5V_{DD}$
- VOS level set to VOS1

Table 114. DCMI characteristics(1)

Symbol	Parameter	Min	Max	Unit
-	Frequency ratio DCMI_PIXCLK/f_{HCLK}	-	0.4	-
DCMI_PIXCLK	Pixel Clock input	-	80	MHz
D_{pixel}	Pixel Clock input duty cycle	30	70	%
$t_{su(}$DATA)	Data input setup time	3	-	-
t_h(DATA)	Data hold time	1	-	
tsu(HSYNC), tsu(VSYNC)	DCMI_HSYNC/ DCMI_VSYNC input setup time	2	-	ns
th(HSYNC), th(VSYNC)	DCMI_HSYNC/ DCMI_VSYNC input hold time	1	-	-

1. Guaranteed by characterization results.

Figure 48. DCMI timing diagram

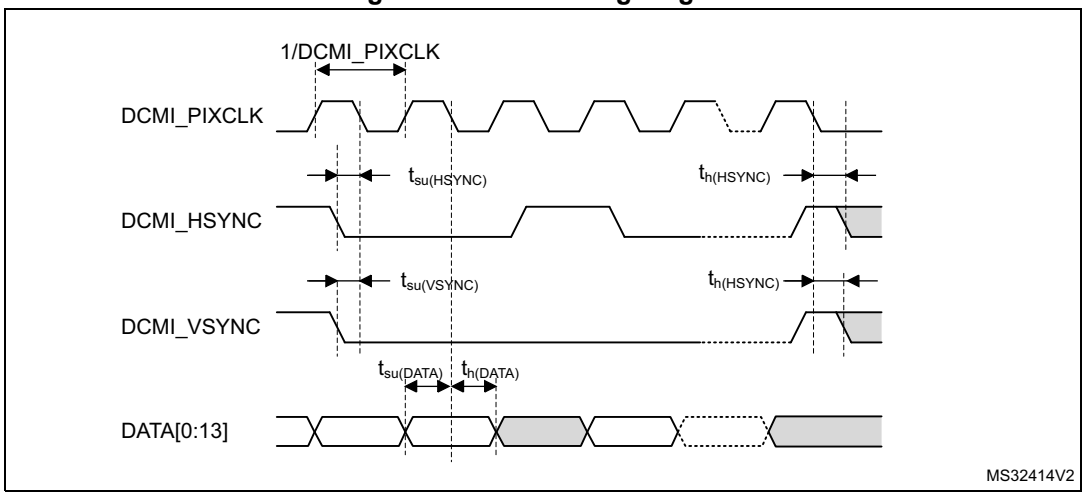

6.3.33 LCD-TFT controller (LTDC) characteristics

Unless otherwise specified, the parameters given in *Table 115* for LCD-TFT are derived from tests performed under the ambient temperature, f_{HCLK} frequency and VDD supply voltage summarized in *Table 23: General operating conditions*, with the following configuration:

- LCD_CLK polarity: high
- LCD_DE polarity: low
- LCD_VSYNC and LCD_HSYNC polarity: high
- Pixel formats: 24 bits
- Output speed is set to OSPEEDRy[1:0] = 11
- Capacitive load C_L=30 pF
- Measurement points are done at CMOS levels: 0.5VDD
- IO Compensation cell activated.
- HSLV activated when $V_{DD} \leq 2.7$ V
- VOS level set to VOS1

Table 115. LTDC characteristics(1)

Symbol	Parameter		Min	Max	Unit
f_{CLK}	LTDC clock output frequency	2.7<V_{DD}<3.6 V 20pF	-	150	MHz
		2.7<V_{DD}<3.6 V		133	
		1.62<V_{DD}<3.6 V		90	
D_{CLK}	LTDC clock output duty cycle		45	55	%
$t_{w(CLKH)}$, $t_{w(CLKL)}$	Clock High time, low time		$t_{w(CLK)}$//2-0.5	$t_{w(CLK)}$//2+0.5	-
$t_{v(DATA)}$	Data output valid time	2.7<V_{DD}<3.6 V	-	0.5	
$t_{h(DATA)}$		1.62<V_{DD}<3.6 V		5	
$t_{v(DATA)}$	Data output hold time		0	-	
$t_{v(HSYNC)}$, $t_{v(VSYNC)}$, $t_{v(DE)}$	HSYNC/VSYNC/DE output valid time	2.7<V_{DD}<3.6 V	-	0.5	-
		1.62<V_{DD}<3.6 V	-	5	
$t_{h(HSYNC)}$, $t_{h(VSYNC)}$, $t_{h(DE)}$	HSYNC/VSYNC/DE output hold time		0	-	-

1. Guaranteed by characterization results.

Figure 49. LCD-TFT horizontal timing diagram

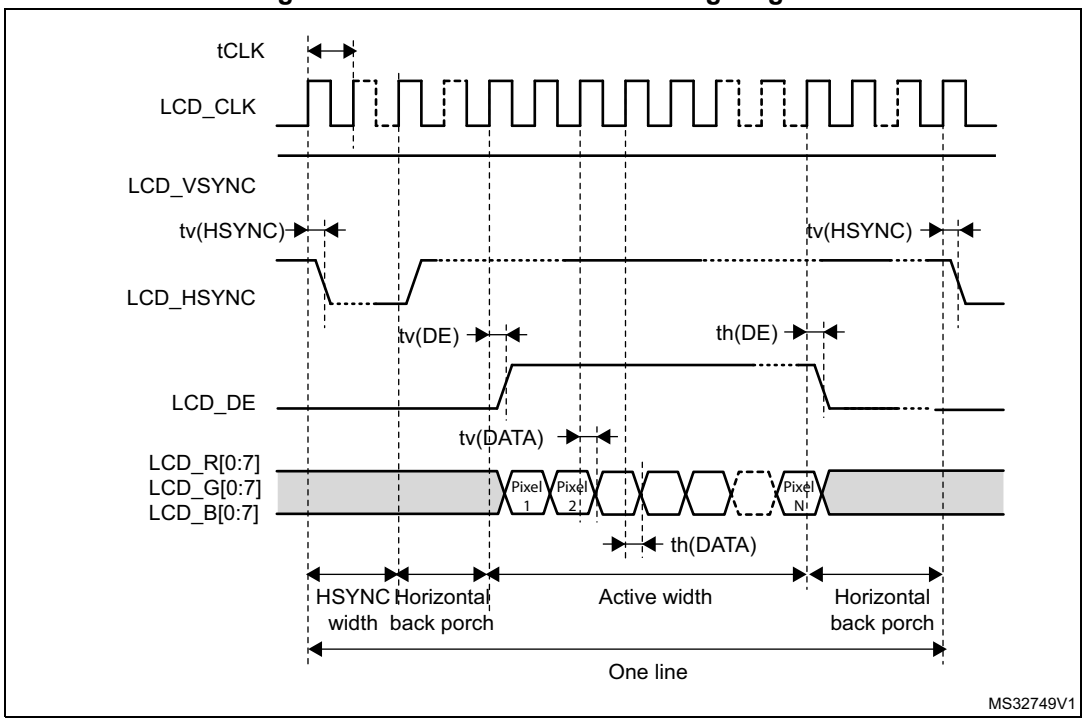

Figure 50. LCD-TFT vertical timing diagram

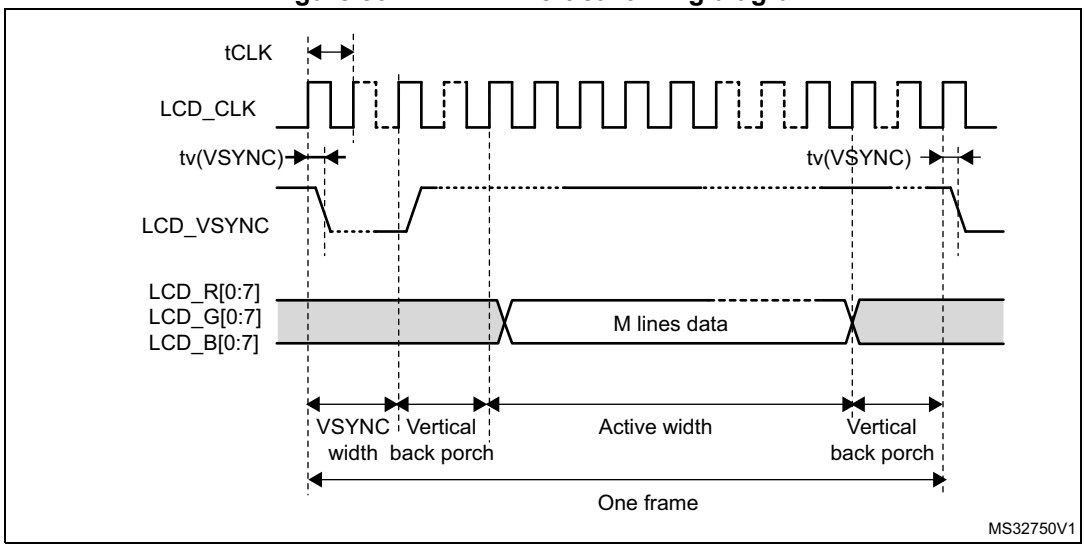

6.3.34 Timer characteristics

The parameters given in *Table 116* are guaranteed by design.

Refer to *Section 6.3.18: I/O port characteristics* for details on the input/output alternate function characteristics (output compare, input capture, external clock, PWM output).

Table 116. TIMx characteristics(1)(2)

Symbol	Parameter	Conditions(3)	Min	Max	Unit
$t_{res(TIM)}$	Timer resolution time	AHB/APBx prescaler=1 or 2 or 4, $f_{TIMxCLK}$ = 240 MHz	1	-	$t_{TIMxCLK}$
		AHB/APBx prescaler>4, $f_{TIMxCLK}$ = 120 MHz	1	-	$t_{TIMxCLK}$
f_{EXT}	Timer external clock frequency on CH1 to CH4	$f_{TIMxCLK}$ = 240 MHz	0	$f_{TIMxCLK}/2$	MHz
Res_{TIM}	Timer resolution		-	16/32	bit
t_{MAX_COUNT}	Maximum possible count with 32-bit counter	-	-	65536 × 65536	$t_{TIMxCLK}$

1. TIMx is used as a general term to refer to the TIM1 to TIM17 timers.
2. Guaranteed by design.
3. The maximum timer frequency on APB1 or APB2 is up to 240 MHz, by setting the TIMPRE bit in the RCC_CFGR register, if APBx prescaler is 1 or 2 or 4, then TIMxCLK = rcc_hclk1, otherwise TIMxCLK = 4x $F_{rcc_pclkx_d2}$.

6.3.35 Communication interfaces

I²C interface characteristics

The I²C interface meets the timings requirements of the I2C-bus specification and user manual revision 03 for:

- Standard-mode (Sm): with a bit rate up to 100 kbit/s
- Fast-mode (Fm): with a bit rate up to 400 kbit/s
- Fast-mode Plus (Fm+): with a bit rate up to 1 Mbit/s.

The I²C timings requirements are guaranteed by design when the I²C peripheral is properly configured (refer to RM0399 reference manual) and when the i2c_ker_ck frequency is greater than the minimum shown in the table below:

Table 117. Minimum i2c_ker_ck frequency in all I²C modes

Symbol	Parameter	Condition		Min	Unit
f(I2CCLK)	I2CCLK frequency	Standard-mode	-	2	MHz
		Fast-mode	Analog Filtre ON DNF=0	8	
			Analog Filtre OFF DNF=1	9	
		Fast-mode Plus	Analog Filtre ON DNF=0	17	
			Analog Filtre OFF DNF=1	16	-

The SDA and SCL I/O requirements are met with the following restrictions:

- The SDA and SCL I/O pins are not “true” open-drain. When configured as open-drain, the PMOS connected between the I/O pin and V_{DDIOx} is disabled, but still present.
- The 20 mA output drive requirement in Fast-mode Plus is not supported. This limits the maximum load C_{Load} supported in Fm+, which is given by these formulas:

  $t_{r(SDA/SCL)}=0.8473xR_PxC_{Load}$

  $R_{P(min)}= (V_{DD}-V_{OL(max)})/I_{OL(max)}$

  Where R_P is the I2C lines pull-up. Refer to *Section 6.3.18: I/O port characteristics* for the I²C I/Os characteristics.

All I²C SDA and SCL I/Os embed an analog filter. Refer to the table below for the analog filter characteristics:

Table 118. I²C analog filter characteristics(1)

Symbol	Parameter	Min	Max	Unit
t_{AF}	Maximum pulse width of spikes that are suppressed by analog filter	50(2)	80(3)	ns

1. Guaranteed by characterization results.
2. Spikes with widths below $t_{AF(min)}$ are filtered.
3. Spikes with widths above $t_{AF(max)}$ are not filtered.

USART (SPI mode) interface characteristics

Unless otherwise specified, the parameters given in *Table 119* for USART are derived from tests performed under the ambient temperature, f_{PCLKx} frequency and V_{DD} supply voltage conditions summarized in *Table 23: General operating conditions*, with the following configuration:

- Output speed is set to OSPEEDRy[1:0] = 10
- Capacitive load C_L = 30 pF
- Measurement points are done at CMOS levels: $0.5V_{DD}$
- IO Compensation cell activated.
- VOS level set to VOS1

Refer to *Section 6.3.18: I/O port characteristics* for more details on the input/output alternate function characteristics (NSS, CK, TX, RX for USART).

Table 119. USART (SPI mode) characteristics(1)

Symbol	Parameter	Conditions	Min	Typ	Max	Unit
f_{CK}	USART clock frequency	SPI master mode	-	-	12.5	MHz
		SPI slave mode			25	
$t_{su(NSS)}$	NSS setup time	SPI slave mode	t_{ker}+1	-	-	-
$t_{h(NSS)}$	NSS hold time	SPI slave mode	2	-	-	
$t_{w(CKH)}$, $t_{w(CKL)}$	CK high and low time	SPI master mode	$1/f_{CK}/2-2$	$1/f_{CK}/2$	$1/f_{CK}/2+2$	
$t_{su(RX)}$	Data input setup time	SPI master mode	t_{ker}+6	-	-	ns
		SPI slave mode	1.5	-	-	
$t_{h(RX)}$	Data input hold time	SPI master mode	0	-	-	
		SPI slave mode	1.5	-	-	
$t_{v(TX)}$	Data output valid time	SPI slave mode	-	12	20	
		SPI master mode	-	0.5	1	
$t_{h(TX)}$	Data output hold time	SPI slave mode	9	-	-	
		SPI master mode	0	-	-	

1. Guaranteed by characterization results.

Figure 51. USART timing diagram in SPI master mode

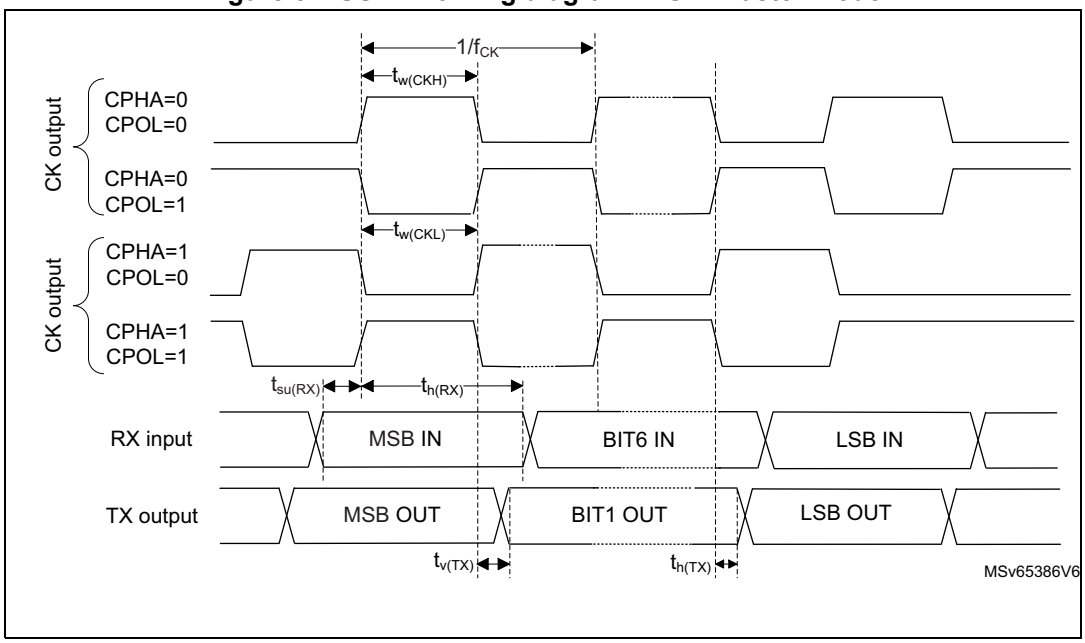

1. Measurement points are done at $0.5V_{DD}$ and with external C_L = 30 pF.

Figure 52. USART timing diagram in SPI slave mode

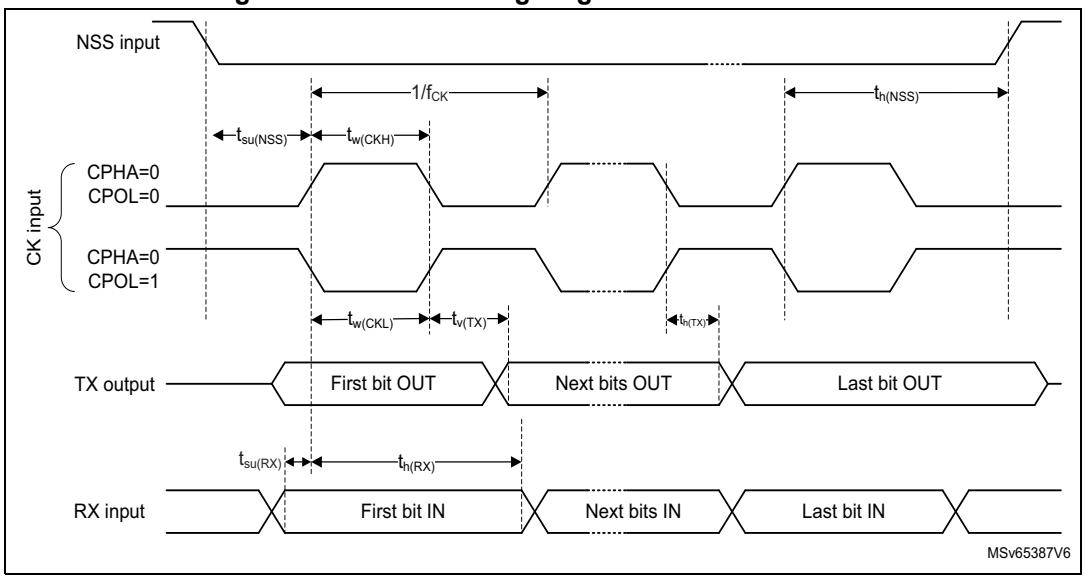

SPI interface characteristics

Unless otherwise specified, the parameters given in *Table 120* for SPI are derived from tests performed under the ambient temperature, f_{PCLKx} frequency and V_{DD} supply voltage conditions summarized in *Table 23: General operating conditions*, with the following configuration:

- Output speed is set to OSPEEDRy[1:0] = 11
- Capacitive load C_L = 30 pF
- Measurement points are done at CMOS levels: $0.5V_{DD}$
- IO Compensation cell activated.
- HSLV activated when VDD ≤ 2.7 V
- VOS level set to VOS1

Refer to *Section 6.3.18: I/O port characteristics* for more details on the input/output alternate function characteristics (NSS, SCK, MOSI, MISO for SPI).

Table 120. SPI dynamic characteristics(1)

Symbol	Parameter	Conditions	Min	Typ	Max	Unit
f_{SCK}	SPI clock frequency	Master mode 1.62<V_{DD}<3.6 V SPI1, 2, 3	-	-	80	MHz
		Master mode 2.7<V_{DD}<3.6 V SPI1, 2, 3			100	
		Master mode 1.62<V_{DD}<3.6 V SPI4, 5, 6			50	
		Slave receiver mode 1.62<V_{DD}<3.6 V			100	
		Slave mode transmitter/full duplex 2.7<V_{DD}<3.6 V			31	
		Slave mode transmitter/full duplex 1.62 <V_{DD}<3.6 V			29	
$t_{su(NSS)}$	NSS setup time	Slave mode	2	-	-	-
$t_{h(NSS)}$	NSS hold time	Slave mode	1	-	-	
$t_{w(SCKH)}$, $t_{w(SCKL)}$	SCK high and low time	Master mode	T_{PCLK}-2	T_{PCLK}	T_{PCLK}+2	
$t_{su(MI)}$	Data input setup time	Master mode	2	-	-	ns
$t_{su(SI)}$		Slave mode	1	-	-	
$t_{h(MI)}$	Data input hold time	Master mode	3	-	-	
$t_{h(SI)}$		Slave mode	2	-	-	
$t_{a(SO)}$	Data output access time	Slave mode	9	13	27	
$t_{dis(SO)}$	Data output disable time	Slave mode	0	1	5	
$t_{v(SO)}$	Data output valid time	Slave mode 2.7<V_{DD}<3.6 V	-	12.5	16	
		Slave mode 1.62<V_{DD}<3.6 V	-	12.5	17	
$t_{v(MO)}$		Master mode	-	1	3	
$t_{h(SO)}$	Data output hold time	Slave mode 1.62<V_{DD}<3.6 V	10	-	-	
$t_{h(MO)}$		Master mode	0	-	-	

1. Guaranteed by characterization results.

Figure 53. SPI timing diagram - slave mode and CPHA = 0

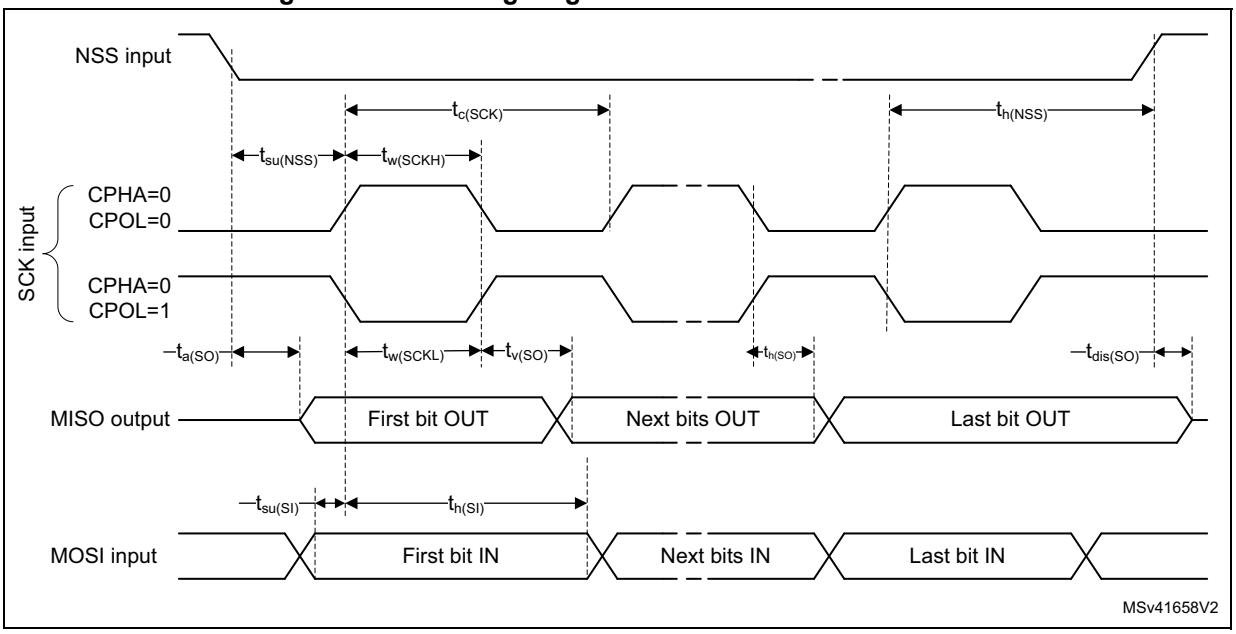

Figure 54. SPI timing diagram - slave mode and CPHA = 1

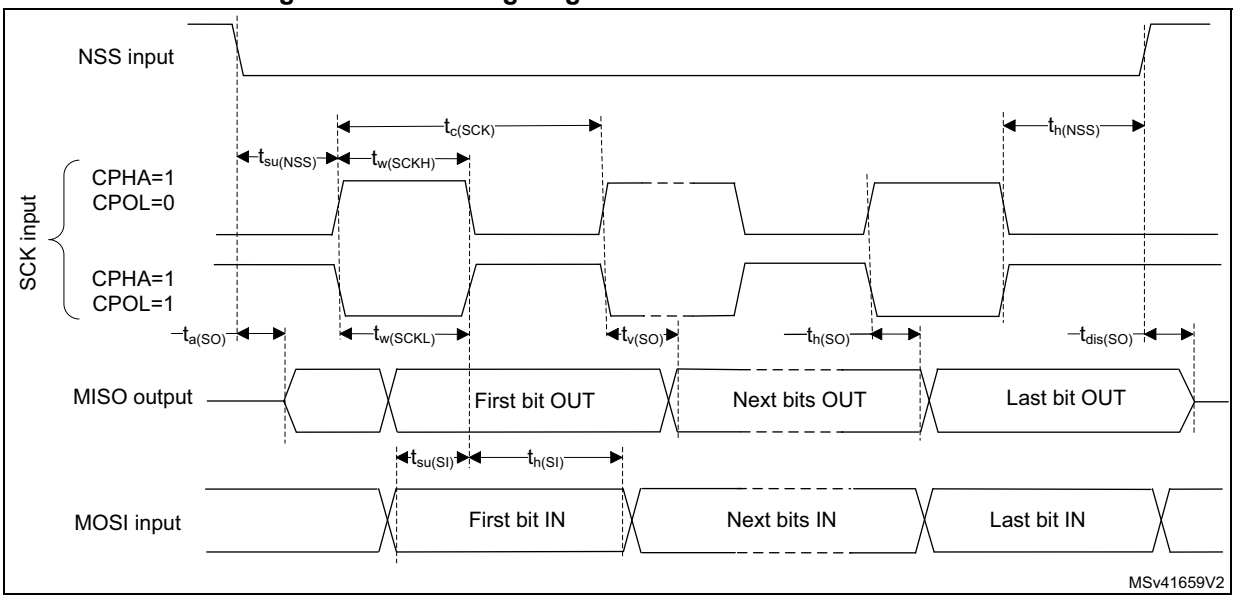

Figure 55. SPI timing diagram - master mode

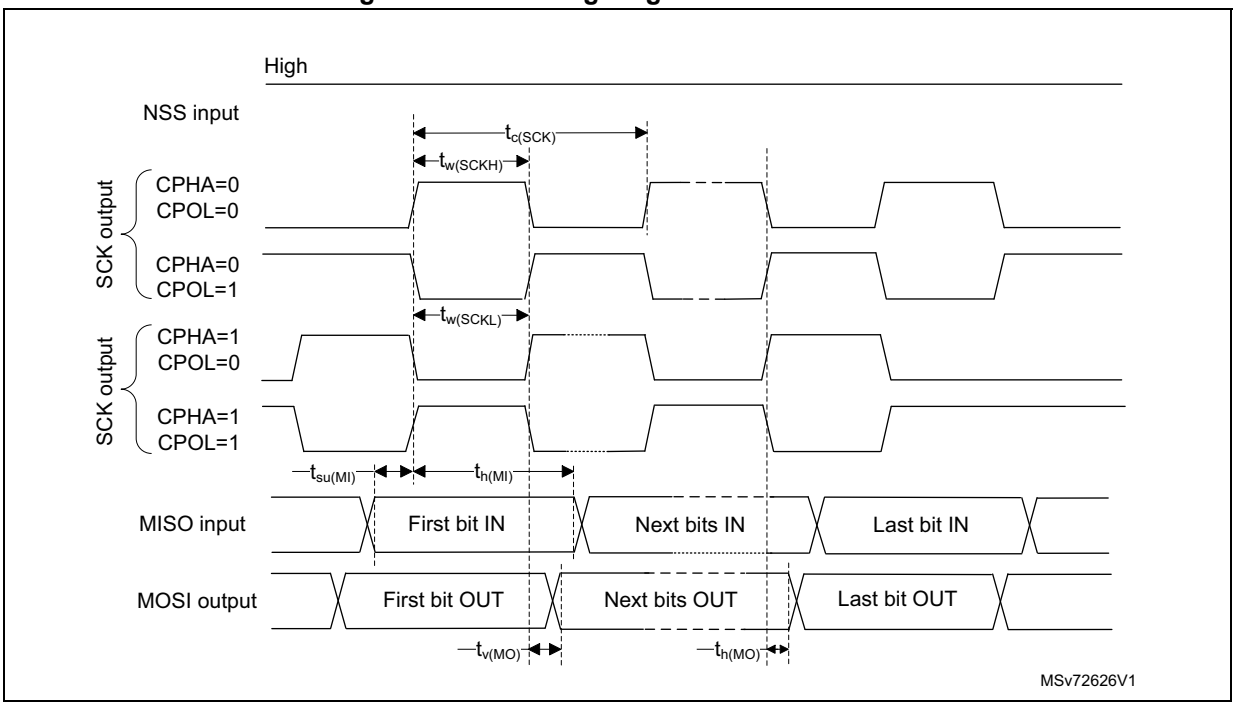

I²S Interface characteristics

Unless otherwise specified, the parameters given in *Table 121* for I²S are derived from tests performed under the ambient temperature, f_{PCLKx} frequency and V_{DD} supply voltage conditions summarized in *Table 23: General operating conditions*, with the following configuration:

- Output speed is set to OSPEEDRy[1:0] = 10
- Capacitive load C_L = 30 pF
- Measurement points are done at CMOS levels: $0.5V_{DD}$
- IO Compensation cell activated.
- HSLV activated when VDD ≤ 2.7 V
- VOS level set to VOS1

Refer to *Section 6.3.18: I/O port characteristics* for more details on the input/output alternate function characteristics (CK,SD,WS).

Table 121. I²S dynamic characteristics(1)

Symbol	Parameter	Conditions	Min	Max	Unit
f_{MCK}	I²S main clock output	-	256x8K	$256F_S$	MHz
f_{CK}	I²S clock frequency	Master data	-	$64F_S$	MHz
		Slave data	-	$64F_S$	
$t_{v(WS)}$	WS valid time	Master mode	-	3	ns
$t_{h(WS)}$	WS hold time	Master mode	0	-	
$t_{su(WS)}$	WS setup time	Slave mode	1	-	
$t_{h(WS)}$	WS hold time	Slave mode	1	-	
$t_{su(SD_MR)}$	Data input setup time	Master receiver	1	-	
$t_{su(SD_SR)}$		Slave receiver	1	-	
$t_{h(SD_MR)}$	Data input hold time	Master receiver	4	-	
$t_{h(SD_SR)}$		Slave receiver	2	-	
$t_{v(SD_ST)}$	Data output valid time	Slave transmitter (after enable edge)	-	17	
$t_{v(SD_MT)}$		Master transmitter (after enable edge)	-	3	
$t_{h(SD_ST)}$	Data output hold time	Slave transmitter (after enable edge)	9	-	
$t_{h(SD_MT)}$		Master transmitter (after enable edge)	0	-	

1. Guaranteed by characterization results.

Figure 56. I²S slave timing diagram (Philips protocol)(1)

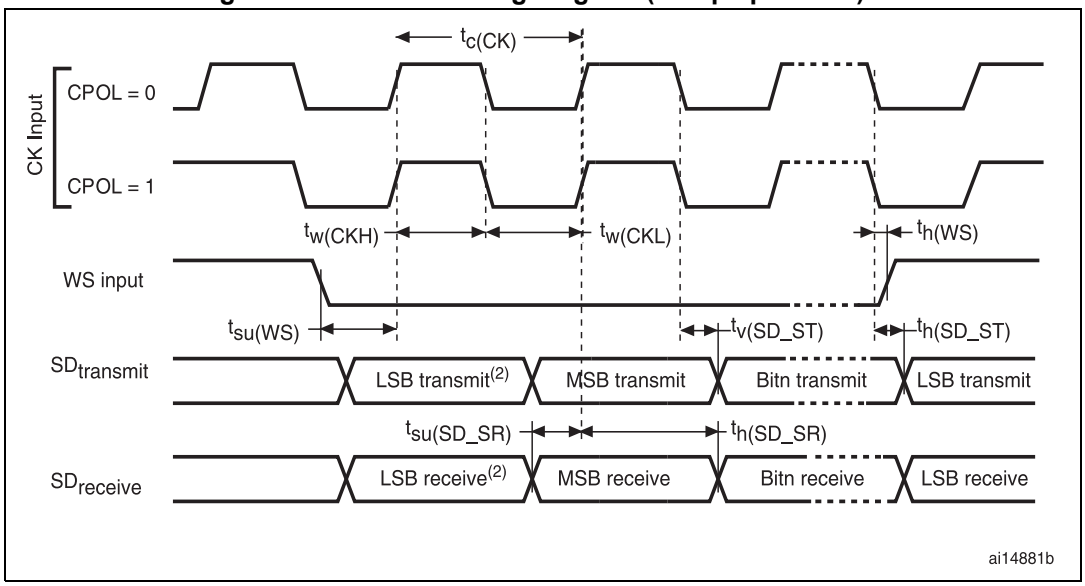

1. LSB transmit/receive of the previously transmitted byte. No LSB transmit/receive is sent before the first byte.

Figure 57. I²S master timing diagram (Philips protocol)(1)

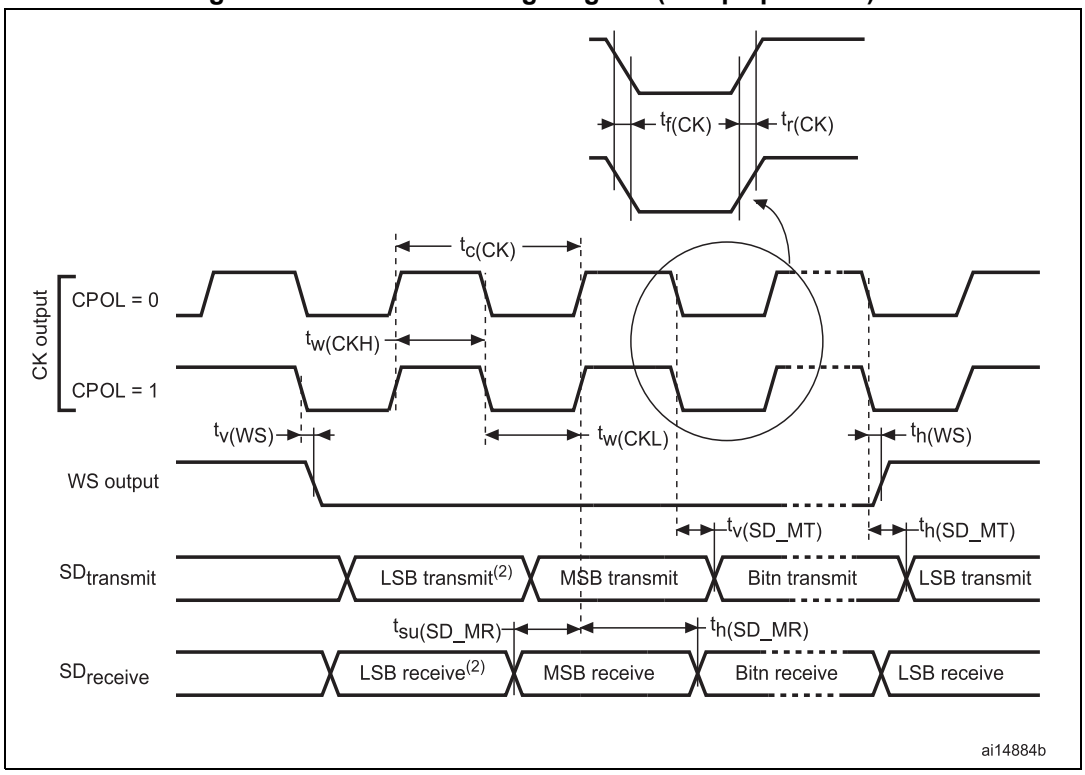

1. LSB transmit/receive of the previously transmitted byte. No LSB transmit/receive is sent before the first byte.

SAI characteristics

Unless otherwise specified, the parameters given in *Table 122* for SAI are derived from tests performed under the ambient temperature, f_{PCLKx} frequency and VDD supply voltage conditions summarized in *Table 23: General operating conditions*, with the following configuration:

- Output speed is set to OSPEEDRy[1:0] = 10
- Capacitive load C_L = 30 pF
- IO Compensation cell activated.
- Measurement points are done at CMOS levels: 0.5VDD
- VOS level set to VOS1.

Refer to *Section 6.3.18: I/O port characteristics* for more details on the input/output alternate function characteristics (SCK,SD,WS).

Table 122. SAI characteristics(1)

Symbol	Parameter	Conditions	Min	Max	Unit
f_{MCK}	SAI Main clock output	-	256x8K	$256xF_S$	MHz
f_{CK}	SAI clock frequency(2)	Master Data: 32 bits	-	$128xF_S$(3)	
		Slave Data: 32 bits	-	$128xF_S$(3)	

Table 122. SAI characteristics[1] (continued)

Symbol	Parameter	Conditions	Min	Max	Unit
$t_{v(FS)}$	F_S valid time	Master mode $2.7 \le V_{DD} \le 3.6$	-	13	ns
		Master mode $1.62 \le V_{DD} \le 3.6$	-	20	
$t_{su(FS)}$	F_S hold time	Master mode	8	-	
$t_{h(FS)}$	F_S setup time	Slave mode	1	-	
	F_S hold time	Slave mode	1	-	
$t_{su(SD_A_MR)}$	Data input setup time	Master receiver	0.5	-	
$t_{su(SD_B_SR)}$		Slave receiver	1	-	
$t_{h(SD_A_MR)}$	Data input hold time	Master receiver	3.5	-	
$t_{h(SD_B_SR)}$		Slave receiver	2	-	
$t_{v(SD_B_ST)}$	Data output valid time	Slave transmitter (after enable edge) $2.7 \le V_{DD} \le 3.6$	-	14	
		Slave transmitter (after enable edge) $1.62 \le V_{DD} \le 3.6$	-	20	
$t_{h(SD_B_ST)}$	Data output hold time	Slave transmitter (after enable edge)	9	-	
$t_{v(SD_A_MT)}$	Data output valid time	Master transmitter (after enable edge) $2.7 \le V_{DD} \le 3.6$	-	12	
		Master transmitter (after enable edge) $1.62 \le V_{DD} \le 3.6$	-	19	
$t_{h(SD_A_MT)}$	Data output hold time	Master transmitter (after enable edge)	7.5	-	

1. Guaranteed by characterization results.
2. APB clock frequency must be at least twice SAI clock frequency.
3. With F_S=192 kHz.

Figure 58. SAI master timing waveforms

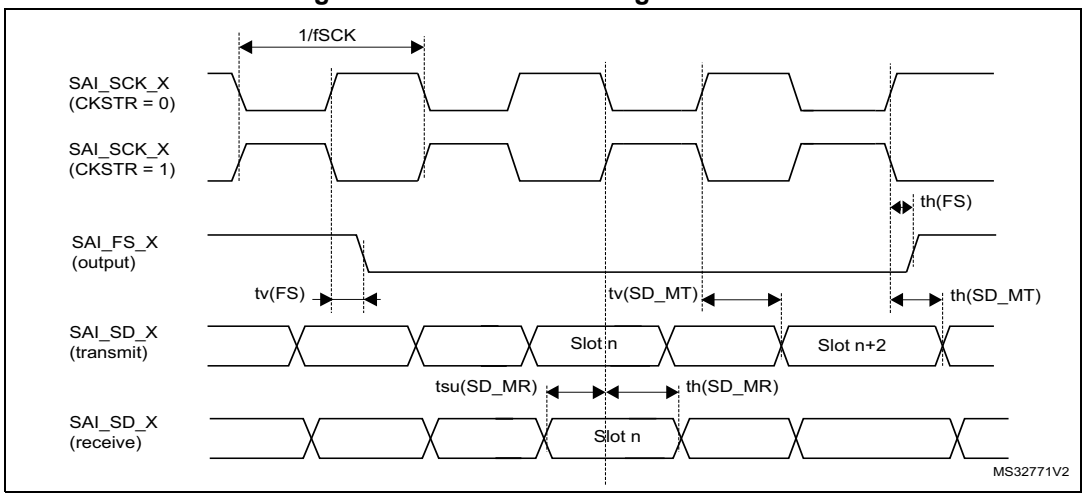

Figure 59. SAI slave timing waveforms

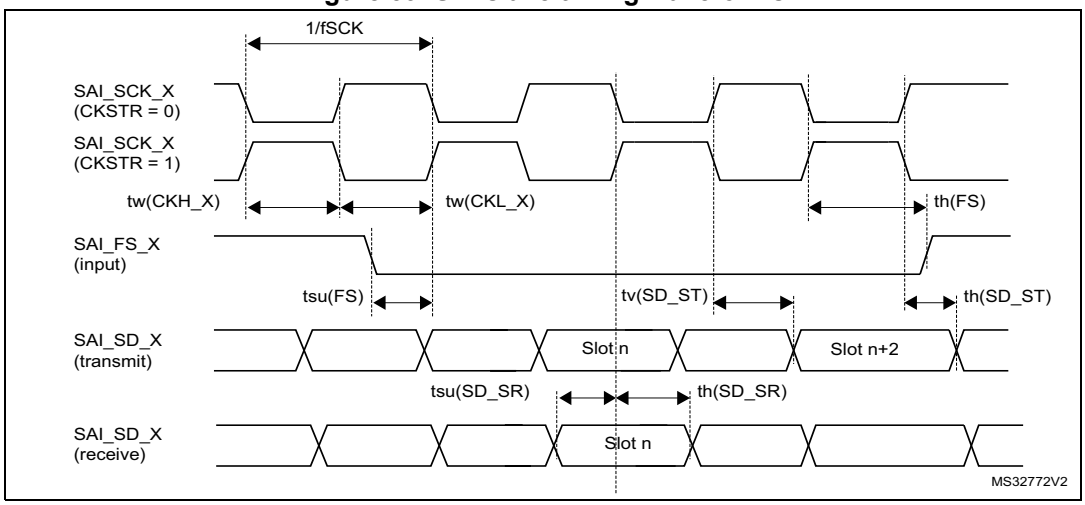

MDIO characteristics

Table 123. MDIO Slave timing parameters

Symbol	Parameter	Min	Typ	Max	Unit
F_{MDC}	Management Data Clock	-	-	30	MHz
$t_{d(MDIO)}$	Management Data Iput/output output valid time	8	10	19	ns
$t_{su(MDIO)}$	Management Data Iput/output setup time	1	-	-	
$t_{h(MDIO)}$	Management Data Iput/output hold time	1	-	-	

Figure 60. MDIO Slave timing diagram

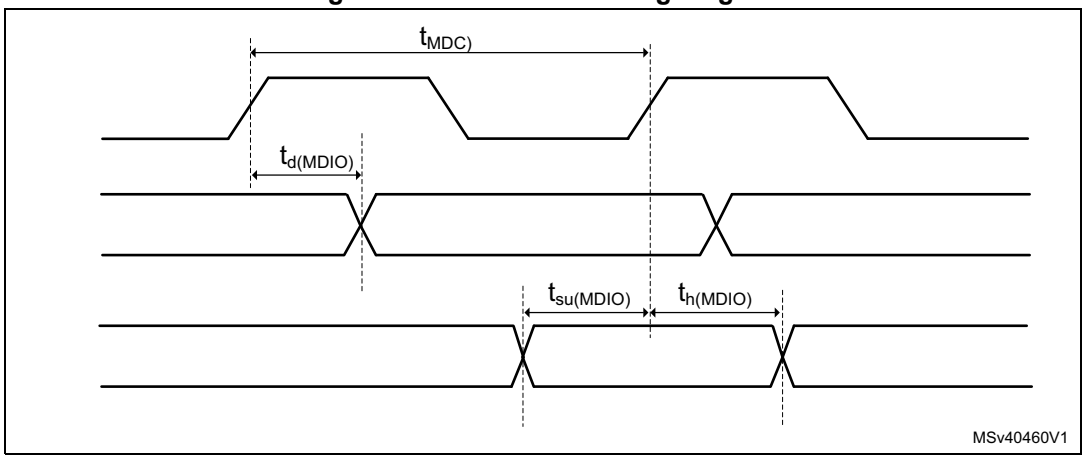

SD/SDIO MMC card host interface (SDMMC) characteristics

Unless otherwise specified, the parameters given in *Table 124* and *Table 125* for SDIO are derived from tests performed under the ambient temperature, f_{PCLKx} frequency and VDD supply voltage summarized in *Table 23: General operating conditions*, with the following configuration:

- Output speed is set to OSPEEDRy[1:0] = 0x11
- Capacitive load C_L=30 pF
- Measurement points are done at CMOS levels: $0.5V_{DD}$
- IO Compensation cell activated.
- HSLV activated when $V_{DD} \leq 2.7$ V
- VOS level set to VOS1

Refer to *Section 6.3.18: I/O port characteristics* for more details on the input/output characteristics.

Table 124. Dynamics characteristics: SD / MMC characteristics, V_{DD} = 2.7 to 3.6 V(1)(2)

Symbol	Parameter	Conditions	Min	Typ	Max	Unit
f_{PP}	Clock frequency in data transfer mode	-	0	-	133	MHz
-	SDIO_CK/fPCLK2 frequency ratio	-	-	-	8/3	-
$t_{W(CKL)}$	Clock low time	f_{PP} =52MHz	8.5	9.5	-	ns
$t_{W(CKH)}$	Clock high time	f_{PP} =52MHz	8.5	9.5	-	
CMD, D inputs (referenced to CK) in eMMC legacy/SDR/DDR and SD HS/SDR(3)/DDR(3) mode						
t_{ISU}	Input setup time HS	-	2.5	-	-	ns
t_{IH}	Input hold time HS	-	0.5	-	-	
t_{IDW}(4)	Input valid window (variable window)	-	3	-	-	-
CMD, D outputs (referenced to CK) in eMMC legacy/SDR/DDR and SD HS/SDR/DDR(3) mode						
t_{OV}	Output valid time HS	-	-	3.5	5	ns
t_{OH}	Output hold time HS	-	3	-	-	

Table 124. Dynamics characteristics: SD / MMC characteristics, V_{DD} = 2.7 to 3.6 V(1)(2) (continued)

Symbol	Parameter	Conditions	Min	Typ	Max	Unit
CMD, D inputs (referenced to CK) in SD default mode						
t_{ISUD}	Input setup time SD	-	2.5	-	-	ns
t_{IHD}	Input hold time SD	-	0.5	-	-	
CMD, D outputs (referenced to CK) in SD default mode						
t_{OVD}	Output valid default time SD	-	-	0.5	2	ns
t_{OHD}	Output hold default time SD	-	0	-	-	

1. Guaranteed by characterization results.
2. Above 100 MHz, C_L = 20 pF.
3. An external voltage converter is required to support SD 1.8 V.
4. The minimum window of time where the data needs to be stable for proper sampling in tuning mode.

Table 125. Dynamics characteristics: eMMC characteristics VDD = 1.71V to 1.9V(1)(2)

Symbol	Parameter	Conditions	Min	Typ	Max	Unit
f_{PP}	Clock frequency in data transfer mode	-	0	-	120	MHz
-	SDIO_CK/fPCLK2 frequency ratio	-	-	-	8/3	-
$t_{W(CKL)}$	Clock low time	f_{PP} =52 MHz	8.5	9.5	-	ns
$t_{W(CKH)}$	Clock high time	f_{PP} =52 MHz	8.5	9.5	-	
CMD, D inputs (referenced to CK) in eMMC mode						
t_{ISU}	Input setup time HS	-	2	-	-	ns
t_{IH}	Input hold time HS	-	1.5	-	-	
t_{IDW}(3)	Input valid window (variable window)	-	3.5	-	-	
CMD, D outputs (referenced to CK) in eMMC mode						
t_{OVD}	Output valid time HS	-	-	5	7	ns
t_{OHD}	Output hold time HS	-	3	-	-	

1. Guaranteed by characterization results.
2. C_L = 20 pF.
3. The minimum window of time where the data needs to be stable for proper sampling in tuning mode.

Figure 61. SDIO high-speed mode

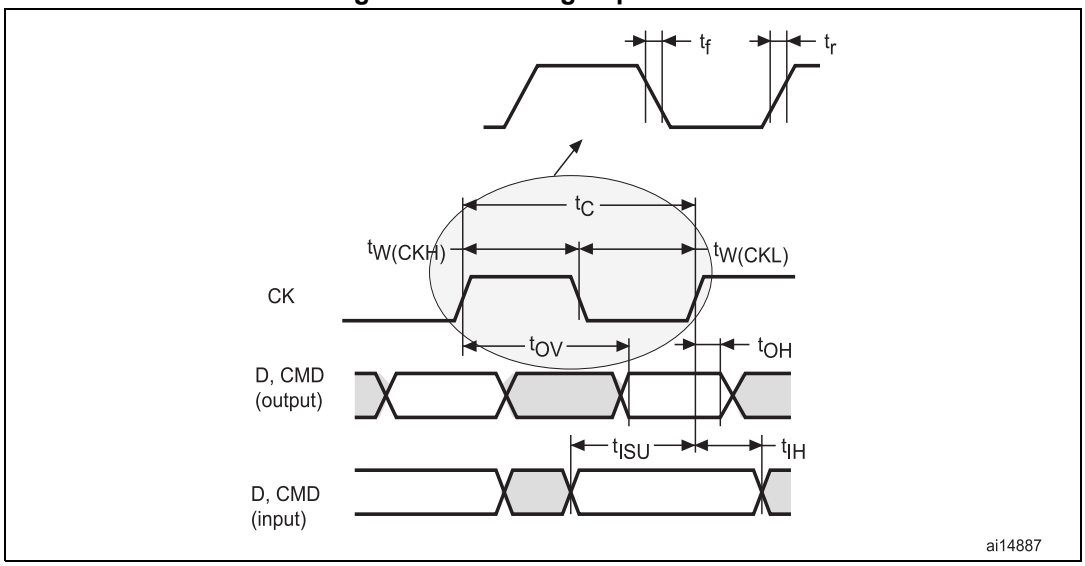

Figure 62. SD default mode

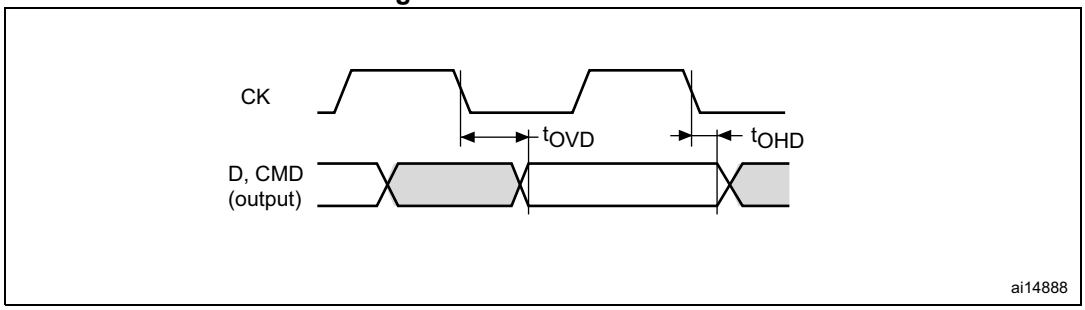

Figure 63. DDR mode

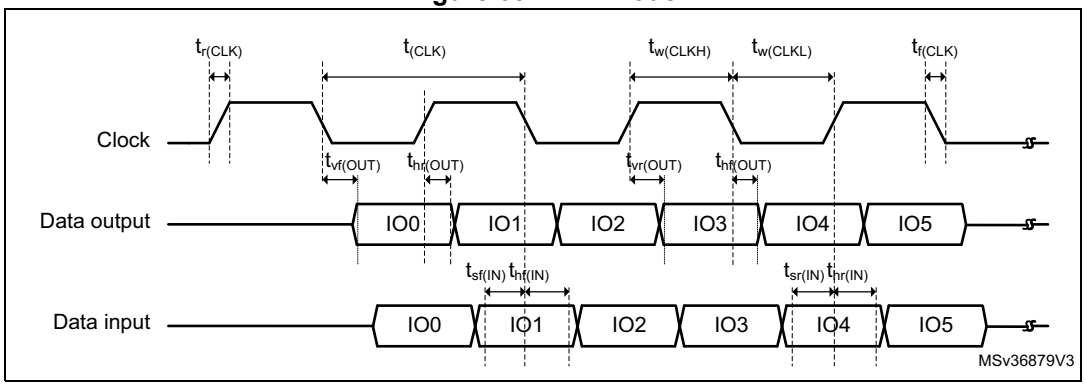

USB OTG_FS characteristics

The USB interface is fully compliant with the USB specification version 2.0 and is USB-IF certified (for Full-speed device operation).

Table 126. USB OTG_FS electrical characteristics

Symbol	Parameter	Condition	Min	Typ	Max	Unit
$V_{DD33USB}$	USB transceiver operating voltage	-	3.0(1)	-	3.6	V
R_{PUI}	Embedded USB_DP pull-up value during idle	-	900	1250	1600	Ω
R_{PUR}	Embedded USB_DP pull-up value during reception	-	1400	2300	3200	
Z_{DRV}	Output driver impedance(2)	Driver high and low	28	36	44	

1. The USB functionality is ensured down to 2.7 V but not the full USB electrical characteristics which are degraded in the 2.7 to 3.0 V voltage range.
2. No external termination series resistors are required on USB_DP (D+) and USB_DM (D-); the matching impedance is already included in the embedded driver.

USB OTG_HS characteristics

Unless otherwise specified, the parameters given in *Table 127* for ULPI are derived from tests performed under the ambient temperature, f_{PCLKx} frequency and V_{DD} supply voltage summarized in *Table 23: General operating conditions*, with the following configuration:

- Output speed is set to OSPEEDRy[1:0] = 11
- Capacitive load C_L=20 pF
- Measurement points are done at CMOS levels: $0.5V_{DD}$
- IO Compensation cell activated.
- VOS level set to VOS1

Refer to *Section 6.3.18: I/O port characteristics* for more details on the input/output characteristics.

Table 127. Dynamics characteristics: USB ULPI(1)

Symbol	Parameter	Condition	Min	Typ	Max	Unit
t_{SC}	Control in (ULPI_DIR, ULPI_NXT) setup time	-	2.5	-	-	ns
		-	4.5(2)	-	-	
t_{HC}	Control in (ULPI_DIR, ULPI_NXT) hold time	-	2	-	-	
t_{SD}	Data in setup time	-	2.5	-	-	
t_{HD}	Data in hold time	-	0	-	-	
t_{DC}/t_{DD}	Control/Datal output delay	$2.7<V_{DD}<3.6$ V C_L=20 pF	-	9	9.5	
		$1.71<V_{DD}<3.6$ V C_L=15 pF	-	9	14	

1. Guaranteed by characterization results.
2. When using PC2_C/PC3_C.

Figure 64. ULPI timing diagram

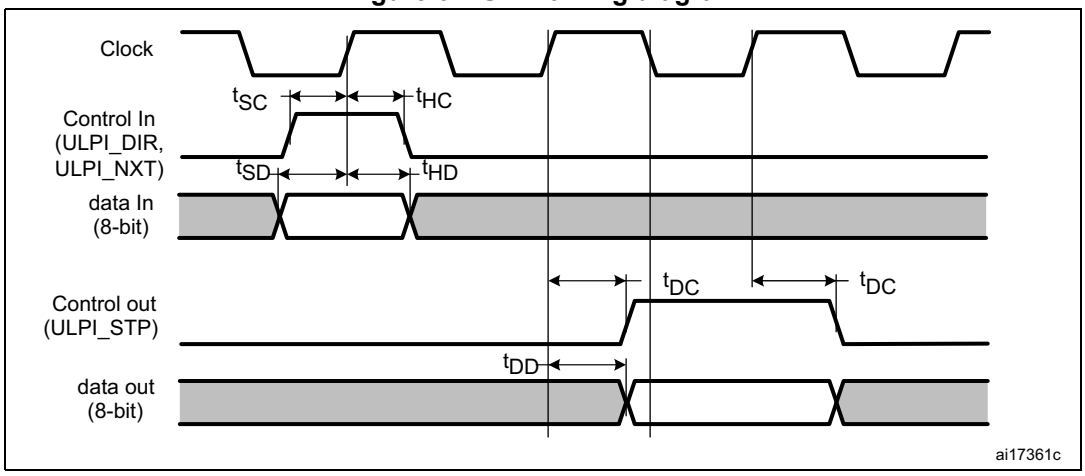

Ethernet interface characteristics

Unless otherwise specified, the parameters given in *Table 128*, *Table 129* and *Table 130* for SMI, RMII and MII are derived from tests performed under the ambient temperature, $f_{rcc_c_ck}$ frequency and V_{DD} supply voltage conditions summarized in *Table 23: General operating conditions*, with the following configuration:

- Output speed is set to OSPEEDRy[1:0] = 10
- Capacitive load C_L=20 pF
- Measurement points are done at CMOS levels: $0.5V_{DD}$
- IO Compensation cell activated.
- HSLV activated when VDD ≤ 2.7 V
- VOS level set to VOS1

Refer to *Section 6.3.18: I/O port characteristics* for more details on the input/output characteristics:

Table 128. Dynamics characteristics: Ethernet MAC signals for SMI (1)

Symbol	Parameter	Min	Typ	Max	Unit
t_{MDC}	MDC cycle time(2.5 MHz)	400	400	403	ns
$T_{d(MDIO)}$	Write data valid time	0.5	1.5	4	
$t_{su(MDIO)}$	Read data setup time	12.5	-	-	
$t_{h(MDIO)}$	Read data hold time	0	-	-	

1. Guaranteed by characterization results.

Figure 65. Ethernet SMI timing diagram

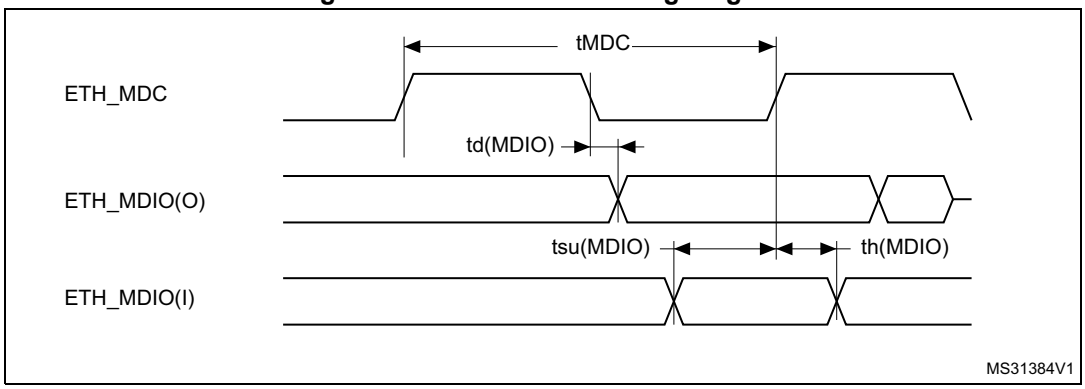

Table 129. Dynamics characteristics: Ethernet MAC signals for RMII (1)

Symbol	Parameter	Min	Typ	Max	Unit
$t_{su(RXD)}$	Receive data setup time	2	-	-	ns
$t_{ih(RXD)}$	Receive data hold time	2	-	-	
$t_{su(CRS)}$	Carrier sense setup time	1.5	-	-	
$t_{ih(CRS)}$	Carrier sense hold time	1.5	-	-	
$t_{d(TXEN)}$	Transmit enable valid delay time	7	8	9.5	
$t_{d(TXD)}$	Transmit data valid delay time	8	9	11	

1. Guaranteed by characterization results.

Figure 66. Ethernet RMII timing diagram

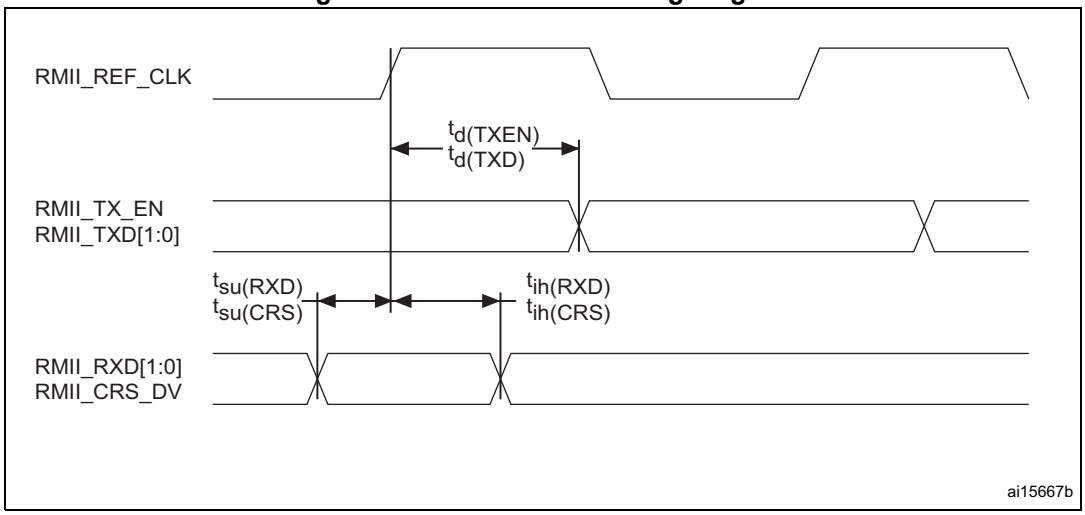

Table 130. Dynamics characteristics: Ethernet MAC signals for MII (1)

Symbol	Parameter	Min	Typ	Max	Unit
$t_{su(RXD)}$	Receive data setup time	2	-	-	ns
$t_{ih(RXD)}$	Receive data hold time	2	-	-	
$t_{su(DV)}$	Data valid setup time	1.5	-	-	
$t_{ih(DV)}$	Data valid hold time	1.5	-	-	
$t_{su(ER)}$	Error setup time	1.5	-	-	
$t_{ih(ER)}$	Error hold time	0.5	-	-	
$t_{d(TXEN)}$	Transmit enable valid delay time	9	10	11	
$t_{d(TXD)}$	Transmit data valid delay time	8.5	9.5	12.5	

1. Guaranteed by characterization results.

Figure 67. Ethernet MII timing diagram

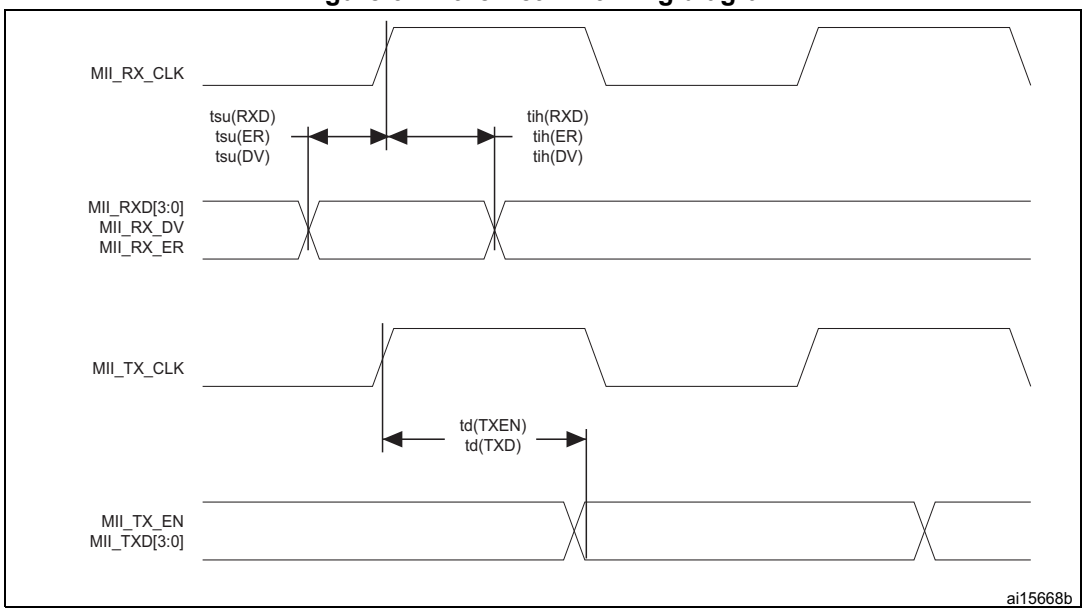

JTAG/SWD interface characteristics

Unless otherwise specified, the parameters given in *Table 131* and *Table 132* for JTAG/SWD are derived from tests performed under the ambient temperature, $f_{rcc_c_ck}$ frequency and V_{DD} supply voltage summarized in *Table 23: General operating conditions*, with the following configuration:

- Output speed is set to OSPEEDRy[1:0] = 0x10
- Capacitive load C_L=30 pF
- Measurement points are done at CMOS levels: $0.5V_{DD}$
- VOS level set to VOS1

Refer to *Section 6.3.18: I/O port characteristics* for more details on the input/output characteristics:

Table 131. Dynamics JTAG characteristics

Symbol	Parameter	Conditions	Min	Typ	Max	Unit
F_{pp}	T_{CK} clock frequency	2.7V <V_{DD}< 3.6 V	-	-	37	MHz
$1/t_{c(TCK)}$		1.62 <V_{DD}< 3.6 V	-	-	27.5	
$ti_{su(TMS)}$	TMS input setup time	-	2.5	-	-	
$ti_{h(TMS)}$	TMS input hold time	-	1	-	-	
$ti_{su(TDI)}$	TDI input setup time	-	1.5	-	-	-
$ti_{h(TDI)}$	TDI input hold time	-	1	-	-	-
$t_{ov(TDO)}$	TDO output valid time	2.7V <V_{DD}< 3.6 V	-	8	13.5	-
		1.62 <V_{DD}< 3.6 V	-	8	18	-
$t_{oh(TDO)}$	TDO output hold time	-	7	-	-	-

Table 132. Dynamics SWD characteristics:

Symbol	Parameter	Conditions	Min	Typ	Max	Unit
F_{pp}	SWCLK clock frequency	2.7V <V_{DD}< 3.6 V	-	-	71	MHz
$1/t_{c(SWCLK)}$		1.62 <V_{DD}< 3.6 V	-	-	52.5	
$t_{isu(SWDIO)}$	SWDIO input setup time	-	2.5	-	-	ns
$t_{ih(SWDIO)}$	SWDIO input hold time	-	1	-	-	
$t_{ov(SWDIO)}$	SWDIO output valid time	2.7V <V_{DD}< 3.6 V	-	8.5	14	
		1.62 <V_{DD}< 3.6 V	-	8.5	19	
$t_{oh(SWDIO)}$	SWDIO output hold time	-	8	-	-	

Figure 68. JTAG timing diagram

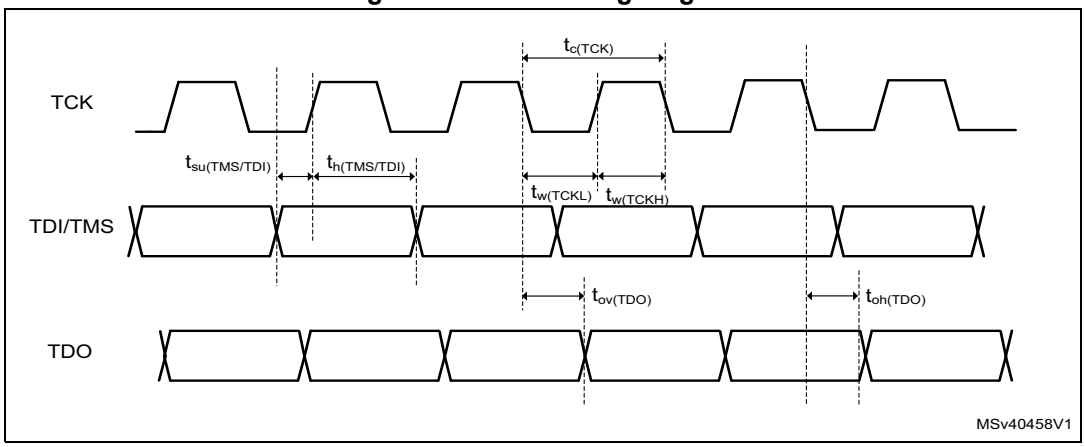

Figure 69. SWD timing diagram

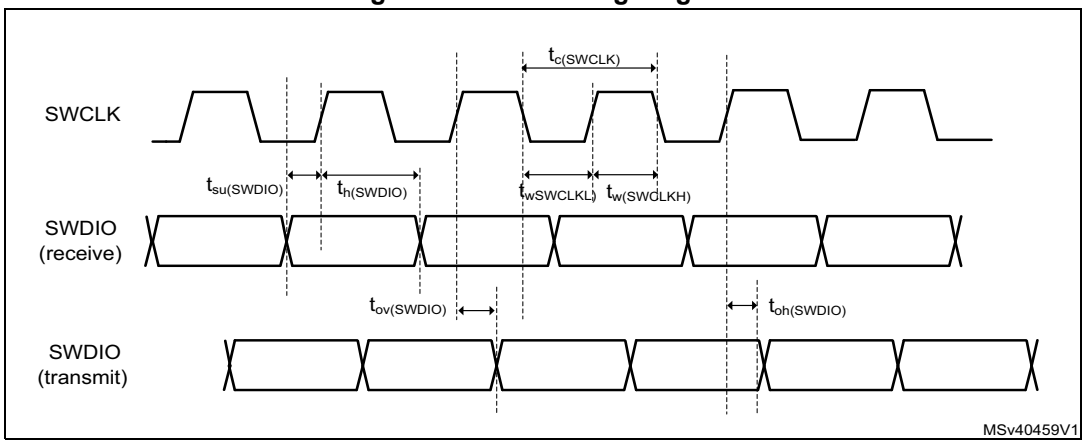

7 Package information

In order to meet environmental requirements, ST offers these devices in different grades of ECOPACK packages, depending on their level of environmental compliance. ECOPACK specifications, grade definitions and product status *are available at www.st.com.* ECOPACK is an ST trademark.

7.1 Device marking

Refer to technical note “Reference device marking schematics for STM32 microcontrollers and microprocessors” (TN1433) available on *www.st.com*, for the location of pin 1 / ball A1 as well as the location and orientation of the marking areas versus pin 1 / ball A1.

Parts marked as “ES”, “E” or accompanied by an engineering sample notification letter, are not yet qualified and therefore not approved for use in production. ST is not responsible for any consequences resulting from such use. In no event will ST be liable for the customer using any of these engineering samples in production. ST’s Quality department must be contacted prior to any decision to use these engineering samples to run a qualification activity.

A WLCSP simplified marking example (if any) is provided in the corresponding package information subsection.

7.2 WLCSP156 package information (A086)

This WLCSP is a 156-bump, 4.96 x 4.64 mm, 0.35 mm pitch, wafer level chip scale package.

Figure 70. WLCSP156 - Outline

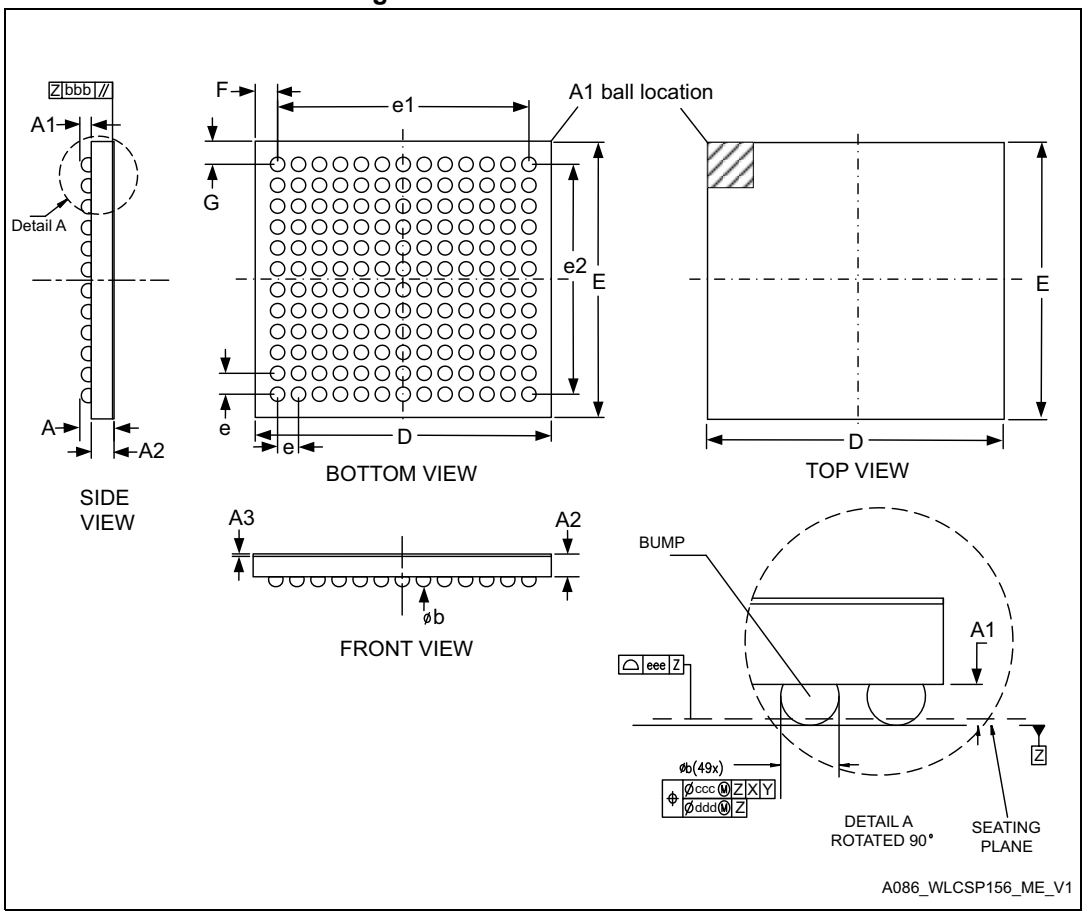

Table 133. WLCSP156 - Mechanical data

Symbol	millimeters			inches(1)		
	Min	Typ	Max	Min	Typ	Max
A	-	-	0.58	0.020	0.021	0.023
A1	-	0.17	-	-	0.006	-
A2	-	0.38	-	-	0.015	-
A3	-	0.025(2)	-	-	0.001	-
b	0.21	0.24	0.27	0.008	0.009	0.011
D	4.94	4.96	4.98	0.193	0.195	0.196
E	4.62	4.64	4.66	0.181	0.182	0.183
e1	-	4.20	-	-	0.014	-
e2	-	3.85	-	-	0.165	-
e	-	0.35	-	-	0.152	-
F	-	0.380(3)	-	-	0.015	-
G	-	0.395(3)	-	-	0.015	-

Table 133. WLCSP156 - Mechanical data (continued)

Symbol	millimeters			inches[1]		
	Min	Typ	Max	Min	Typ	Max
aaa	-	-	0.10	-	-	0.004
bbb	-	-	0.10	-	-	0.004
ccc	-	-	0.10	-	-	0.004
ddd	-	-	0.05	-	-	0.002
eee	-	-	0.05	-	-	0.002

1. Values in inches are converted from mm and rounded to the 3rd decimal place.
2. Back side coating. Nominal dimension rounded to the 3rd decimal place resulting from process capability.
3. Calculated dimensions are rounded to 3rd decimal place.

Figure 71. WLCSP156 - footprint example

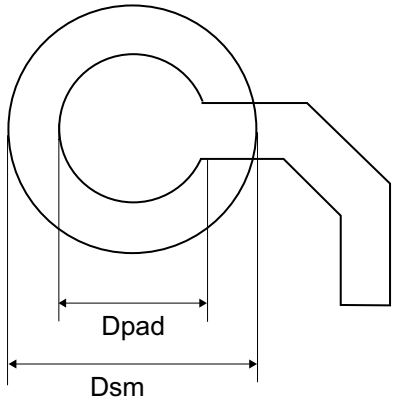

Table 134. WLCSP156 - Example of PCB design rules

Dimension	Values
Pitch	0.35 mm
Dpad	0.210 mm
Dsm	0.275 mm typ. (depends on the soldermask registration tolerance)
Stencil opening	0.235 mm
Stencil thickness	0.100 mm

Device marking for WLSCP156

The following figure gives an example of topside marking versus ball A1 position identifier location.

The printed markings may differ depending on the supply chain.

Other optional marking or inset/upset marks, which depend on supply chain operations, are not indicated below.

Figure 72. WLCSP156 marking example (package top view)

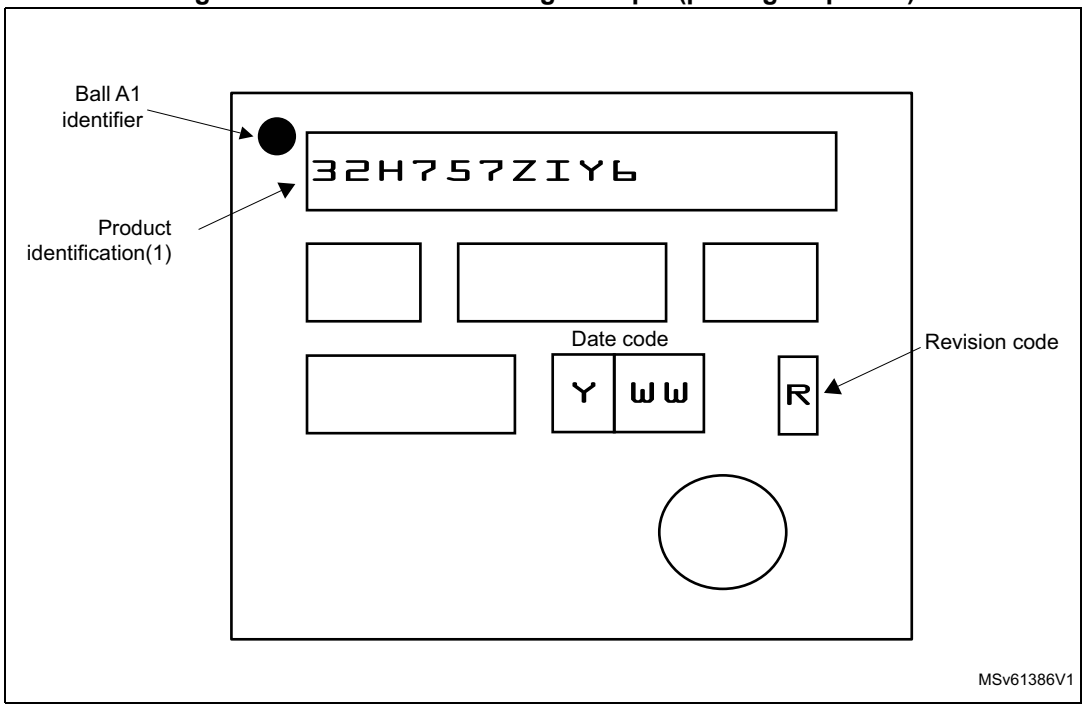

1. Parts marked as “ES”, “E” or accompanied by an Engineering Sample notification letter, are not yet qualified and therefore not approved for use in production. ST is not responsible for any consequences resulting from such use. In no event will ST be liable for the customer using any of these engineering samples in production. ST’s Quality department must be contacted prior to any decision to use these engineering samples to run a qualification activity.

7.3 UFBGA169 package information (A0YV)

This UFBGA is a 169-ball, 7 x 7 mm, 0.50 mm pitch, ultra fine pitch ball grid array package.

Figure 73. UFBGA169 - Outline

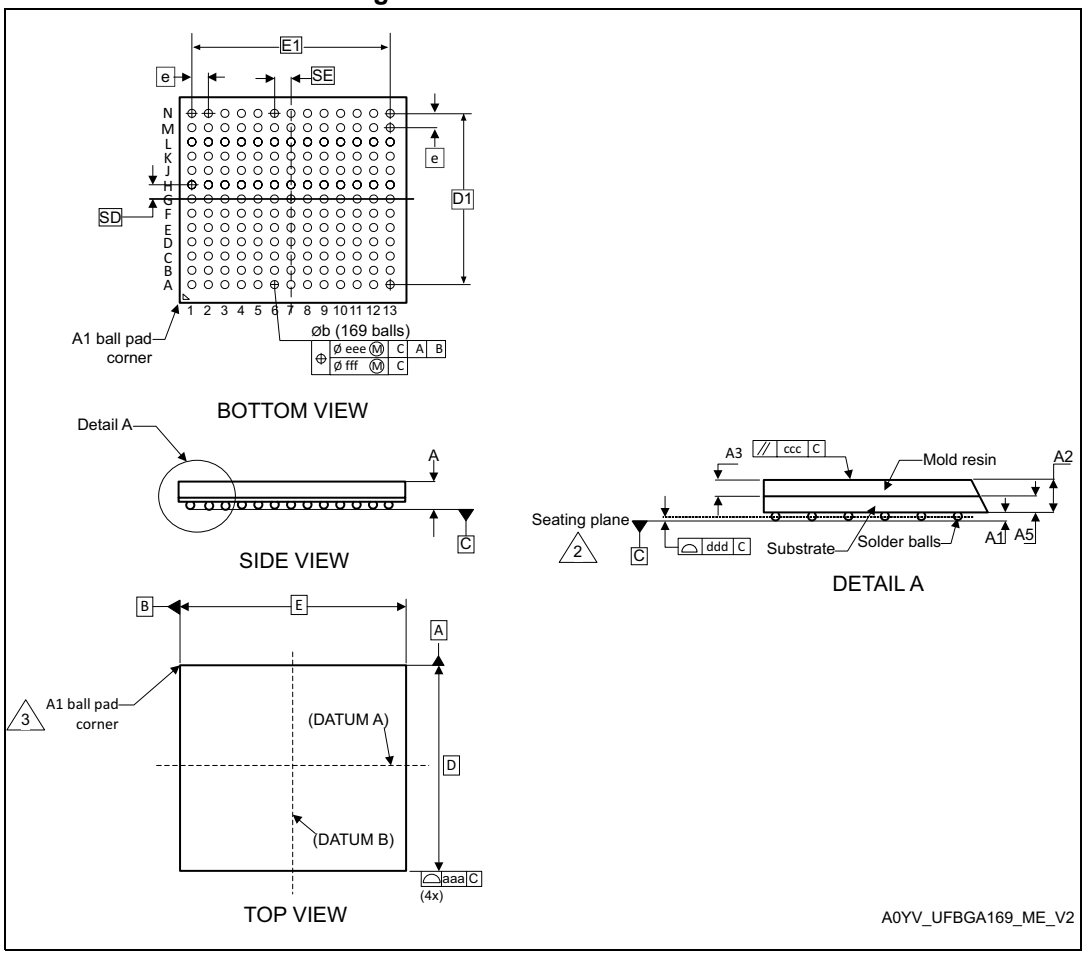

1. Drawing is not to scale.
2. Primary datum C is defined by the plane established by the contact points of three or more solder balls that support the device when it is placed on top of a planar surface.
3. The terminal (ball) A1 corner must be identified on the top surface of the package by using a corner chamfer, ink or metallized markings, or other feature of package body or integral heat slug. A distinguish feature is allowable on the bottom surface of the package to identify the terminal A1 corner. Exact shape of each corner is optional.

Table 135. UFBGA169 - Mechanical data

Symbol	millimeters			inches(1)		
	Min.	Typ.	Max.	Min.	Typ.	Max.
A(2)	-	-	0.60	-	-	0.0236
A1(3)	0.05	-	-	0.0020	-	-
A2	-	0.43	-	-	0.0169	-
b(4)	0.23	0.28	0.33	0.0091	0.0110	0.0130
D(5)	7.00 BSC			0.2756 BSC		
D1(5)	6.00 BSC			0.2362 BSC		
E(5)	7.00 BSC			0.2756 BSC		

Table 135. UFBGA169 - Mechanical data (continued)

Symbol	millimeters			inches[1]		
	Min.	Typ.	Max.	Min.	Typ.	Max.
E1[5]		6.00 BSC			0.2362 BSC	
e[5][6]		0.50 BSC			0.0197 BSC	
N[7]		169				
SD[5][8]		0.50 BSC			0.0197 BSC	
SE[5][8]		0.50 BSC			0.0197 BSC	
aaa[9]		0.15			0.0059	
ccc[9]		0.20			0.0079	
ddd[9]		0.08			0.0031	
eee[9]		0.15			0.0059	
fff[9]		0.05			0.0020	

1. Values in inches are converted from mm and rounded to 4 decimal digits.
2. The profile height, A, is the distance from the seating plane to the highest point on the package. It is measured perpendicular to the seating plane.
3. A1 is defined as the distance from the seating plane to the lowest point on the package body.
4. Dimension b is measured at the maximum diameter of the terminal (ball) in a plane parallel to primary datum C.
5. BSC stands for BASIC dimensions. It corresponds to the nominal value and has no tolerance. For tolerances refer to form and position table.
6. e represents the solder ball grid pitch.
7. N represents the total number of balls on the BGA.
8. Basic dimensions SD and SE are defined with respect to datums A and B. It defines the position of the centre ball(s) in the outer row or column of a fully populated matrix.
9. Tolerance of form and position drawing

Figure 74. UFBGA169 - Footprint example

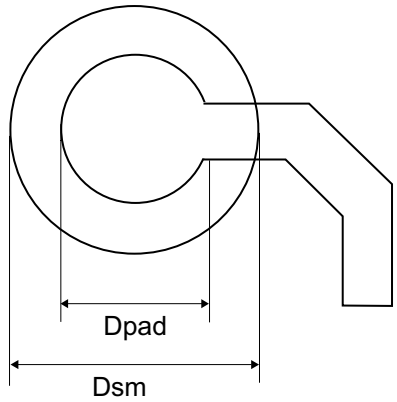

BGA_WLCSP_FT_V1

Table 136. UFBGA169 - Example of PCB design rules (0.5 mm pitch BGA)

Dimension	Values
Pitch	0.5 mm
Dpad	0.27 mm
Dsm	0.35 mm typ. (depends on the soldermask registration tolerance)
Solder paste	0.27 mm aperture diameter.

Note: Non-solder mask defined (NSMD) pads are recommended.

Note: 4 to 6 mils solder paste screen printing process.

7.4 LQFP176 package information (1T)

This LQFP is a 176-pin, 24 x 24 mm, 0.5 mm pitch, low profile quad flat package.

Note: See list of notes in the notes section.

Figure 75. LQFP176 - Outline(15)

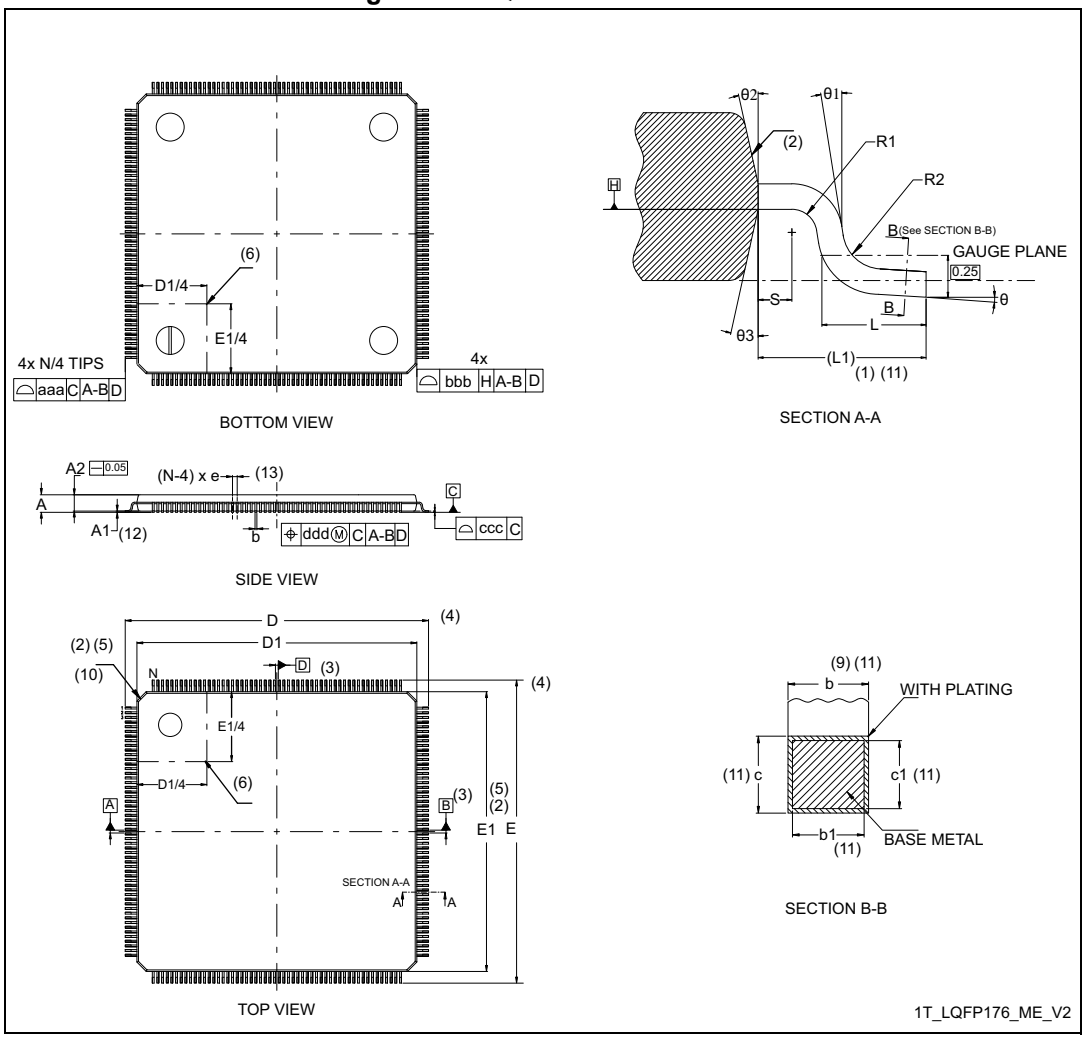

Table 137. LQFP176 - Mechanical data

Symbol	millimeters			inches(14)		
	Min	Typ	Max	Min	Typ	Max
A	-	-	1.600	-	-	0.0630
A1(12)	0.050	-	0.150	0.0020	-	0.0059
A2	1.350	1.400	1.450	0.0531	0.0551	0.0571
b(9)(11)	0.170	0.220	0.270	0.0067	0.0087	0.0106
b1(11)	0.170	0.200	0.230	0.0067	0.0079	0.0091
c(11)	0.090	-	0.200	0.0035	-	0.0079
c1(11)	0.090	-	0.160	0.0035	-	0.063
D(4)	26.000			1.0236		
D1(2)(5)	24.000			0.9449		

Table 137. LQFP176 - Mechanical data (continued)

Symbol	millimeters			inches[14]		
	Min	Typ	Max	Min	Typ	Max
E[4]		26.000			0.0197	
E1[2][5]		24.000			0.9449	
e		0.500			0.1970	
L	0.450	0.600	0.750	0.0177	0.0236	0.0295
L1[1][11]		1			0.0394 REF	
N[13]		176				
q	0°	3.5°	7°	0°	3.5°	7°
q1	0°	-	-	0°	-	-
q2	10°	12°	14°	10°	12°	14°
q3	10°	12°	14°	10°	12°	14°
R1	0.080	-	-	0.0031	-	-
R2	0.080	-	0.200	0.0031	-	0.0079
S	0.200	-	-	0.0079	-	-
aaa[1]		0.200			0.0079	
bbb[1]		0.200			0.0079	
ccc[1]		0.080			0.0031	
ddd[1]		0.080			0.0031	

Notes:

1. Dimensioning and tolerancing schemes conform to ASME Y14.5M-1994.
2. The Top package body size may be smaller than the bottom package size by as much as 0.15 mm.
3. Datums A-B and D to be determined at datum plane H.
4. To be determined at seating datum plane C.
5. Dimensions D1 and E1 do not include mold flash or protrusions. Allowable mold flash or protrusions is “0.25 mm” per side. D1 and E1 are Maximum plastic body size dimensions including mold mismatch.
6. Details of pin 1 identifier are optional but must be located within the zone indicated.
7. All Dimensions are in millimeters.
8. No intrusion allowed inwards the leads.
9. Dimension “b” does not include dambar protrusion. Allowable dambar protrusion shall not cause the lead width to exceed the maximum “b” dimension by more than 0.08 mm.

Dambar cannot be located on the lower radius or the foot. Minimum space between protrusion and an adjacent lead is 0.07 mm for 0.4 mm and 0.5 mm pitch packages.

10. Exact shape of each corner is optional.
11. These dimensions apply to the flat section of the lead between 0.10 mm and 0.25 mm from the lead tip.
12. A1 is defined as the distance from the seating plane to the lowest point on the package body.
13. “N” is the number of terminal positions for the specified body size.
14. Values in inches are converted from mm and rounded to 4 decimal digits.
15. Drawing is not to scale.

Figure 76. LQFP176 - Footprint example

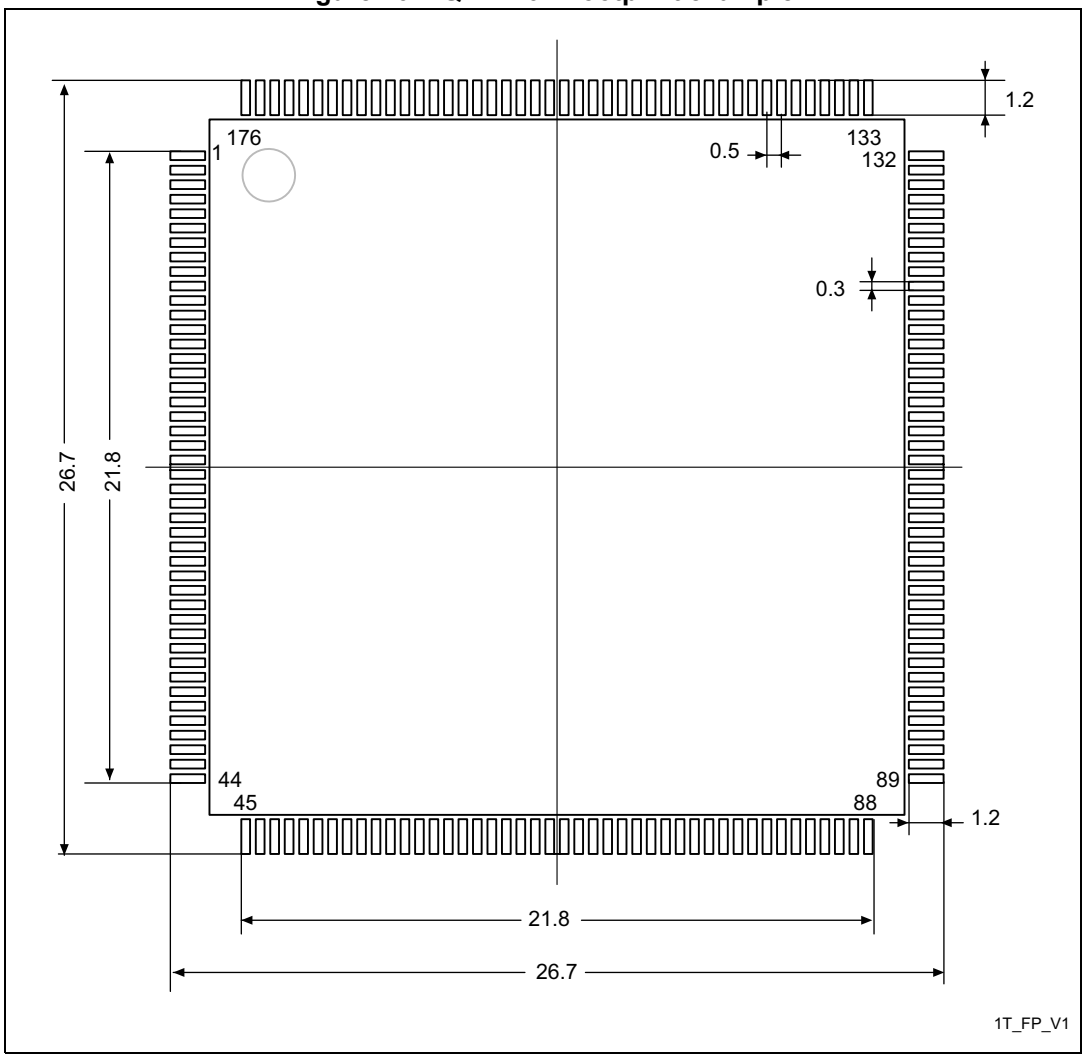

1. Dimensions are expressed in millimeters.

7.5 LQFP208 package information (UH)

This LQFP is a 208-pin, 28 x 28 mm low-profile quad flat package.

Note: See list of notes in the notes section.

Figure 77. LQFP208 - Outline(15)

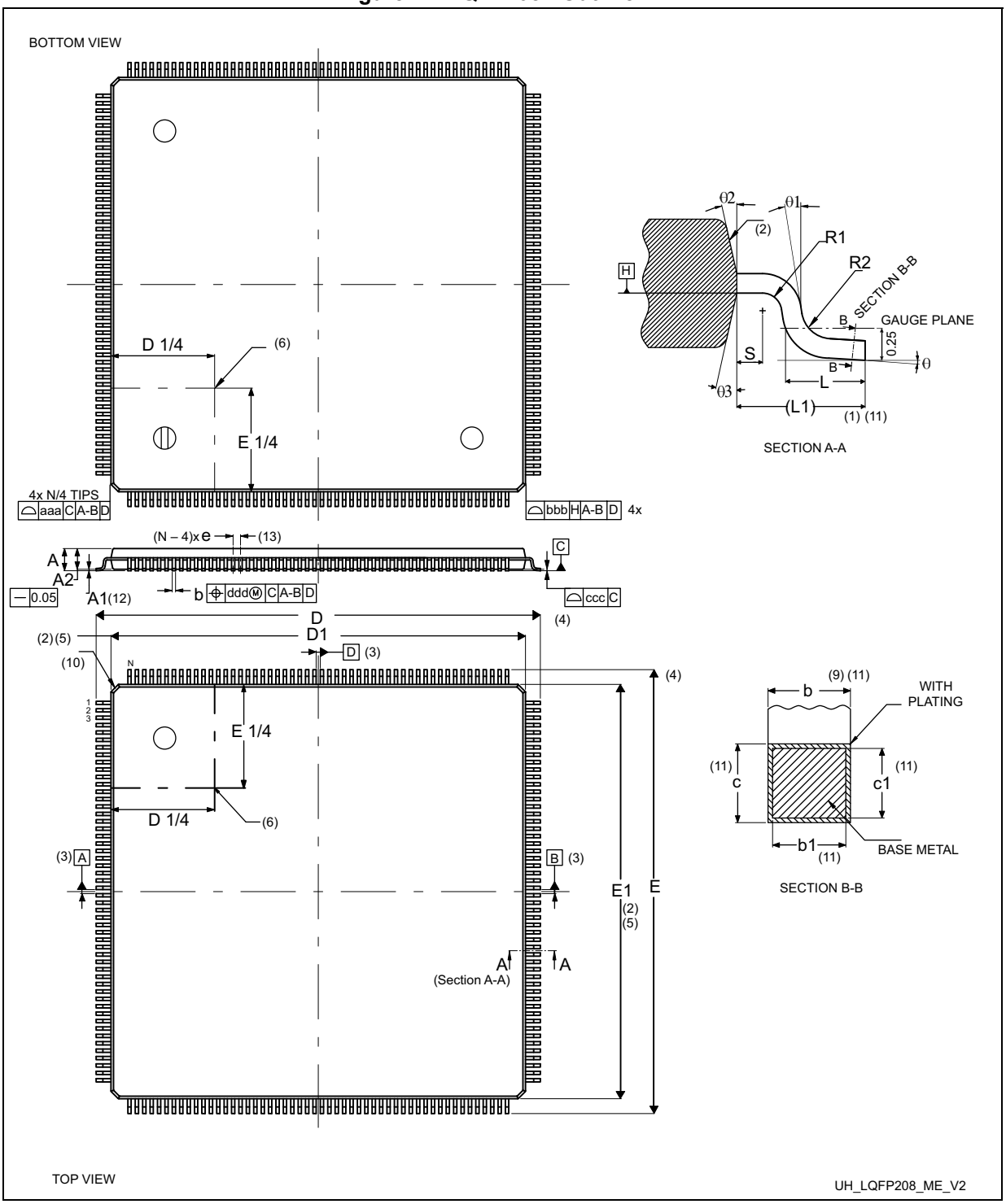

Table 138. LQFP208 - Mechanical data

Symbol	millimeters			inches[15]		
	Min	Typ	Max	Min	Typ	Max
A	-	-	1.60	-	-	0.0630
A1[12]	0.05	-	0.15	0.0020	-	0.0059
A2	1.35	1.40	1.45	0.0531	0.0551	0.0571
b[9][11]	0.17	0.22	0.27	0.0067	0.0087	0.0106
b1[11]	0.17	0.20	0.23	0.0067	0.0079	0.0091
c[11]	0.09	-	0.20	0.0035	-	0.0079
c1[11]	0.09	-	0.16	0.0035	-	0.0063
D[4]	30.00 BSC			1.1732 BSC		
D1[2][5]	28.00 BSC			1.0945 BSC		
E[4]	30.00 BSC			1.1732 BSC		
E1[2][5]	28.00 BSC			1.0945 BSC		
e	0.50 BSC			0.0197 BSC		
L	0.45	0.60	0.75	0.0177	0.0236	0.0295
L1	1.00 REF			0.0394 REF		
N[13]	208					
q	0°	3.5°	7°	0°	3.5°	7°
q1	0°	-	-	0°	-	-
q2	10°	12°	14°	10°	12°	14°
q3	10°	12°	14°	10°	12°	14°
R1	0.08	-	-	0.0031	-	-
R2	0.08	-	0.20	0.0031	-	0.0079
S	0.20	-	-	0.0079	-	-
aaa[1][7]	0.20			0.0079		
bbb[1][7]	0.20			0.0079		
ccc[1][7]	0.08			0.0031		
ddd[1][7]	0.08			0.0031		

Notes:

1. Dimensioning and tolerancing schemes conform to ASME Y14.5M-1994.
2. The Top package body size may be smaller than the bottom package size by as much as 0.15 mm.
3. Datums A-B and D to be determined at datum plane H.
4. To be determined at seating datum plane C.
5. Dimensions D1 and E1 do not include mold flash or protrusions. Allowable mold flash or protrusions is “0.25 mm” per side. D1 and E1 are Maximum plastic body size dimensions including mold mismatch.
6. Details of pin 1 identifier are optional but must be located within the zone indicated.
7. All dimensions are in millimeters.
8. No intrusion allowed inwards the leads.
9. Dimension “b” does not include dambar protrusion. Allowable dambar protrusion shall not cause the lead width to exceed the maximum “b” dimension by more than 0.08 mm. Dambar cannot be located on the lower radius or the foot. Minimum space between protrusion and an adjacent lead is 0.07 mm for 0.4 mm and 0.5 mm pitch packages.
10. Exact shape of each corner is optional.
11. These dimensions apply to the flat section of the lead between 0.10 mm and 0.25 mm from the lead tip.
12. A1 is defined as the distance from the seating plane to the lowest point on the package body.
13. “N” is the number of terminal positions for the specified body size.
14. Values in inches are converted from mm and rounded to 4 decimal digits.
15. Drawing is not to scale.

Figure 78. LQFP208 - footprint example

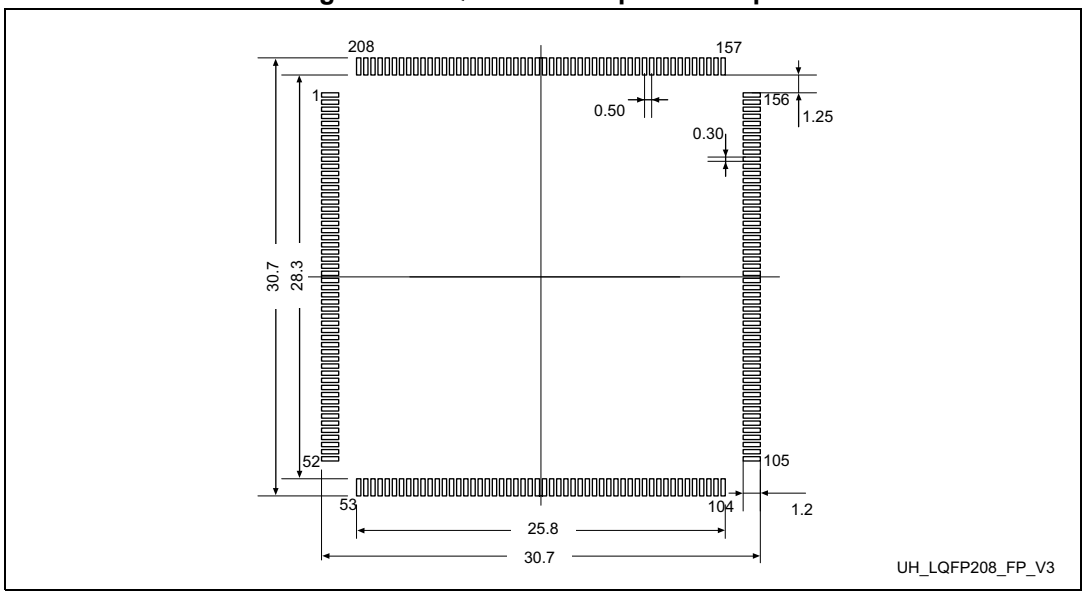

1. Dimensions are expressed in millimeters.

7.6 TFBGA240+25 package information (A07U)

This TFBGA is a 240+25-ball, 14 x 14 mm, 0.8 mm pitch, thin profile fine pitch ball grid array package.

Note: Figure 79 and Figure 80 are not to scale.

Refer to the notes section for the list of notes on Figure 79, Table 140, and Table 141.

Figure 79. TFBGA240+25 - Outline

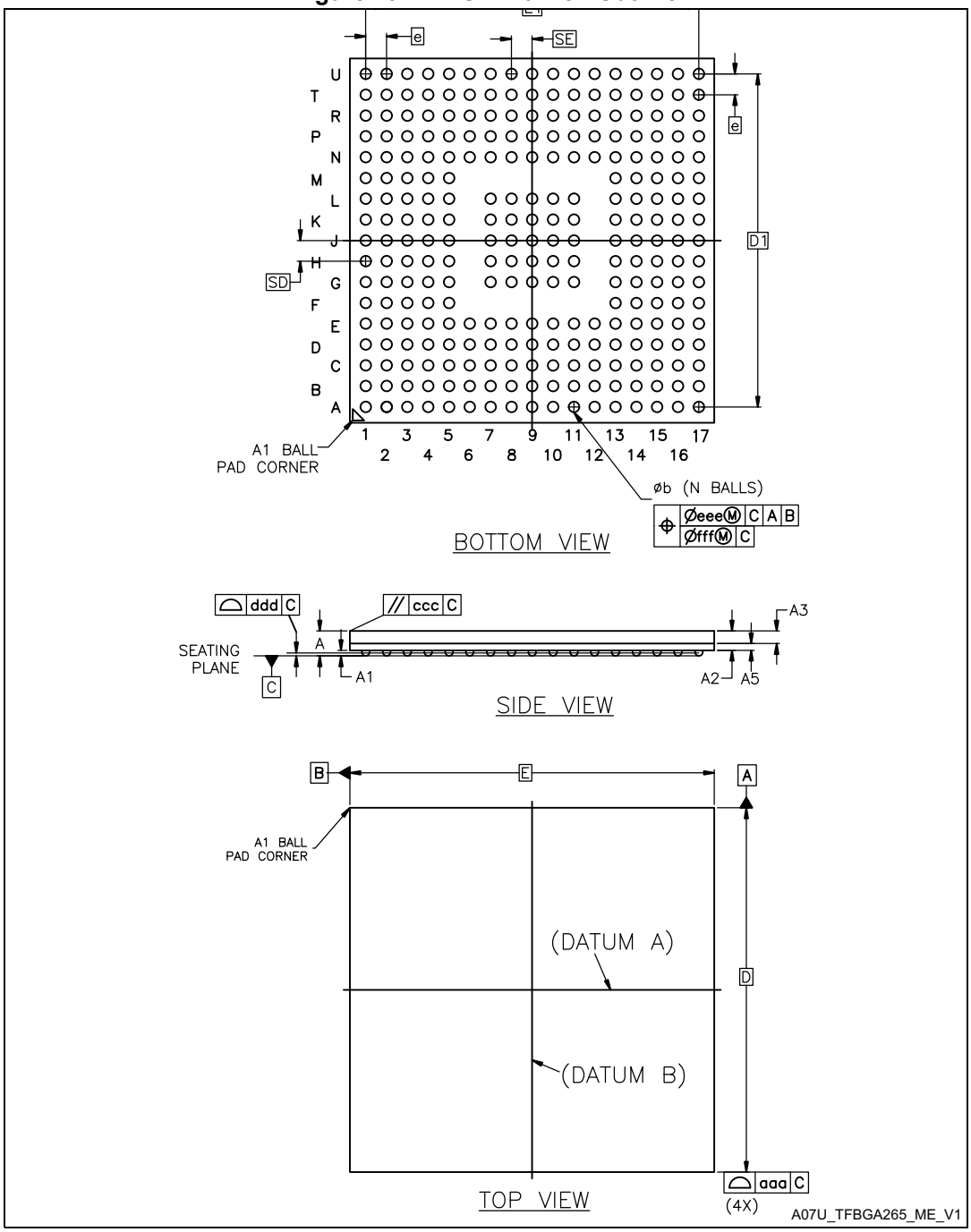

Table 139. TFBGA240+25 - Mechanical data

Symbol	Millimeters			Inches[2]		
	Min	Typ	Max	Min	Typ	Max
A[3]	-	-	1.200	-	-	0.0472
A1[4]	0.150	-	-	0.0059	-	-
A2	-	0.760	-	-	0.0299	-
b[9]	0.320	0.400	0.450	0.0126	0.0157	0.0177
D	14.000 BSC[7]			0.5512 BSC		
D1	12.800 BSC			0.5039 BSC		
E	14.000 BSC			0.5512 BSC		
E1	12.800 BSC			0.0315 BSC		
e[10]	0.800 BSC			0.0315 BSC		
N[11]	265			265		
SD[12]	0.800 BSC			0.0315 BSC		
SE[12]	0.800 BSC			0.0315 BSC		

Table 140. TFBGA240+25 - Tolerance of form and position

Symbol	Millimeters			Inches[2]		
	Min	Typ	Max	Min	Typ	Max
aaa[13]	0.150			0.0059		
ccc[13]	0.200			0.0079		
ddd[13]	0.100			0.0039		
eee[13]	0.150			0.0059		
fff[13]	0.080			0.0031		

Notes:

1. Dimensioning and tolerancing schemes conform to ASME Y14.5M-1994.
2. Values in inches are converted from millimeters and rounded to four decimal digits.
3. The profile height, A, is the distance from the seating plane to the highest point on the package. It is measured perpendicular to the seating plane.
4. A1 is defined as the distance from the seating plane to the lowest point on the package body.
5. TFBGA stands for thin profile fine pitch ball grid array: 1.00 mm < A ≤ 1.20 mm / fine pitch e < 1.00 mm.
6. Dimension b is measured at the maximum diameter of the terminal (ball) in a plane parallel to primary datum C.
7. BSC stands for basic dimensions. It corresponds to the nominal value and has no tolerance. For tolerances, refer to *Table 140*.
8. Primary datum C is defined by the plane established by the contact points of three or more solder balls that support the device when it is placed on top of a planar surface.
9. The terminal (ball) A1 corner must be identified on the top surface of the package by using a corner chamfer, ink or metallized markings, or other feature of package body or integral heat slug. A distinguishing feature is allowed on the bottom surface of the package to identify the terminal A1 corner. Exact shape of each corner is optional.
10. e represents the solder ball grid pitch.
11. N represents the total number of balls on the BGA.
12. Basic dimensions SD and SE are defined with respect to datums A and B. They define the position of the center ball(s) in the outer row or column of a fully populated matrix.
13. For the tolerance of form and position definitions, see the following table.

Table 141. Tolerance of form and position definitions

Symbol	Definition
aaa	The profile tolerance controls the location and orientation of the sides of the package.
ccc	The parallelism tolerance controls the orientation of the top surface of the package with respect to the seating plane, datum C.
ddd	The profile tolerance controls the location of the crowns of the balls with respect to datum C (coplanarity).
eee	The tolerance of position that controls the location of the pattern of balls with respect to datum's A and B.
fff	The tolerance of position that controls the location of the balls within the matrix with respect to each other.

Figure 80. TFBGA240+25 - Footprint example

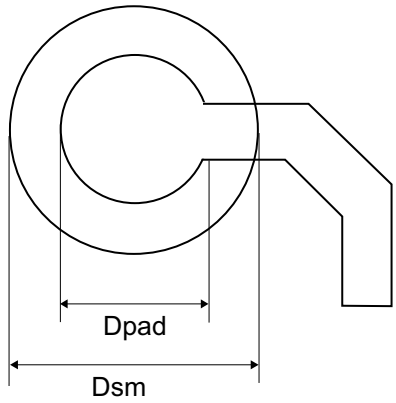

Table 142. TFBGA240+25 - Example of PCB design rules

Dimension	Values
Pitch	0.8 mm
Dpad	0.300 mm
Dsm	0.400 mm typical (depends on the solder mask registration tolerance)
Stencil opening	0.400 mm
Stencil thickness	0.100 mm

7.7 Thermal characteristics

The maximum chip-junction temperature, T_J max, in degrees Celsius, may be calculated using the following equation:

T_J max = T_A max + (P_D max × Θ_{JA})

Where:

- T_A max is the maximum ambient temperature in °C,
- Θ_{JA} is the package junction-to-ambient thermal resistance, in °C/W,
- P_D max is the sum of P_{INT} max and $P_{I/O}$ max (P_D max = P_{INT} max + $P_{I/O}$max),
- P_{INT} max is the product of I_{DD} and V_{DD}, expressed in Watts. This is the maximum chip internal power.

$P_{I/O}$ max represents the maximum power dissipation on output pins where:

$P_{I/O}$ max = Σ (V_{OL} × I_{OL}) + Σ((V_{DD} – V_{OH}) × I_{OH}),

taking into account the actual V_{OL} / I_{OL} and V_{OH} / I_{OH} of the I/Os at low and high level in the application.

Table 143. Thermal characteristics

Symbol	Definition	Parameter	Value	Unit
Θ_{JA}	Thermal resistance junction-ambient	**Thermal resistance junction-ambient** WLCSP156 - 4.96 x 4.64 mm /0.35 mm pitch	35	°C/W
		Thermal resistance junction-ambient UFBGA169 - 7 x 7 mm /0.5 mm pitch	37.7	
		Thermal resistance junction-ambient LQFP176 - 24 x 24 mm /0.5 mm pitch	43.0	
		Thermal resistance junction-ambient LQFP208 - 28 x 28 mm /0.5 mm pitch	42.4	
		Thermal resistance junction-ambient TFBGA240+25 - 14 x 14 mm / 0.8 mm pitch	36.6	
Θ_{JB}	Thermal resistance junction-board	**Thermal resistance junction-ambient** WLCSP156 - 4.96 x 4.64 mm /0.35 mm pitch	18.1	°C/W
		Thermal resistance junction-ambient UFBGA169 - 7 x 7 mm /0.5 mm pitch	17.3	
		Thermal resistance junction-ambient LQFP176 - 24 x 24 mm /0.5 mm pitch	39.4	
		Thermal resistance junction-ambient LQFP208 - 28 x 28 mm /0.5 mm pitch	40.3	
		Thermal resistance junction-ambient TFBGA240+25 - 14 x 14 mm / 0.8 mm pitch	24.3	
Θ_{JC}	Thermal resistance junction-case	**Thermal resistance junction-ambient** WLCSP156 - 4.96 x 4.64 mm /0.35 mm pitch	1	°C/W
		Thermal resistance junction-ambient UFBGA169 - 7 x 7 mm /0.5 mm pitch	11	
		Thermal resistance junction-ambient LQFP176 - 24 x 24 mm /0.5 mm pitch	11.2	
		Thermal resistance junction-ambient LQFP208 - 28 x 28 mm /0.5 mm pitch	11.1	
		Thermal resistance junction-ambient TFBGA240+25 - 14 x 14 mm / 0.8 mm pitch	7.4	

7.7.1 Reference documents

- JESD51-2 Integrated Circuits Thermal Test Method Environment Conditions - Natural Convection (Still Air). Available from www.jedec.org.
- For information on thermal management, refer to application note “Guidelines for thermal management on STM32 applications” (AN5036) available from *www.st.com*.

8 Ordering information

Example: STM32 H 757 X I T 6 A TR[1]

Device family

STM32 = Arm-based 32-bit microcontroller

Product type

H = High performance

Device subfamily

757 = STM32H7x7 dual core MIPI-DSI product line with cryptographic accelerator

Pin count

Z = 156 balls

A = 169 balls

I = 176 pins176+25 balls

B = 208 pins

X = 240+25 balls

Flash memory size

I = 2 Mbytes

Package

T = LQFP ECOPACK2

I = UFBGA pitch 0.5 mm ECOPACK2

H = TFBGA ECOPACK2

Y = WLCSP ECOPACK2

Temperature range

6 = –40 to 85 °C

Option

A = Advanced mission profile (VOS1, 480 MHz)

Packing

TR = tape and reel

No character = tray or tube

1. The tape and reel packing is not available on all packages.

For a list of available options (such as speed and package) or for further information on any aspect of this device, please contact your nearest ST sales office.

9 Important security notice

The STMicroelectronics group of companies (ST) places a high value on product security, which is why the ST product(s) identified in this documentation may be certified by various security certification bodies and/or may implement our own security measures as set forth herein. However, no level of security certification and/or built-in security measures can guarantee that ST products are resistant to all forms of attacks. As such, it is the responsibility of each of ST's customers to determine if the level of security provided in an ST product meets the customer needs both in relation to the ST product alone, as well as when combined with other components and/or software for the customer end product or application. In particular, take note that:

- ST products may have been certified by one or more security certification bodies, such as Platform Security Architecture (www.psacertified.org) and/or Security Evaluation standard for IoT Platforms (www.trustcb.com). For details concerning whether the ST product(s) referenced herein have received security certification along with the level and current status of such certification, either visit the relevant certification standards website or go to the relevant product page on www.st.com for the most up to date information. As the status and/or level of security certification for an ST product can change from time to time, customers should re-check security certification status/level as needed. If an ST product is not shown to be certified under a particular security standard, customers should not assume it is certified.
- Certification bodies have the right to evaluate, grant and revoke security certification in relation to ST products. These certification bodies are therefore independently responsible for granting or revoking security certification for an ST product, and ST does not take any responsibility for mistakes, evaluations, assessments, testing, or other activity carried out by the certification body with respect to any ST product.
- Industry-based cryptographic algorithms (such as AES, DES, or MD5) and other open standard technologies which may be used in conjunction with an ST product are based on standards which were not developed by ST. ST does not take responsibility for any flaws in such cryptographic algorithms or open technologies or for any methods which have been or may be developed to bypass, decrypt or crack such algorithms or technologies.
- While robust security testing may be done, no level of certification can absolutely guarantee protections against all attacks, including, for example, against advanced attacks which have not been tested for, against new or unidentified forms of attack, or against any form of attack when using an ST product outside of its specification or intended use, or in conjunction with other components or software which are used by customer to create their end product or application. ST is not responsible for resistance against such attacks. As such, regardless of the incorporated security features and/or any information or support that may be provided by ST, each customer is solely responsible for determining if the level of attacks tested for meets their needs, both in relation to the ST product alone and when incorporated into a customer end product or application.
- All security features of ST products (inclusive of any hardware, software, documentation, and the like), including but not limited to any enhanced security features added by ST, are provided on an "AS IS" BASIS. AS SUCH, TO THE EXTENT PERMITTED BY APPLICABLE LAW, ST DISCLAIMS ALL WARRANTIES, EXPRESS OR IMPLIED, INCLUDING BUT NOT LIMITED TO THE IMPLIED WARRANTIES OF MERCHANTABILITY OR FITNESS FOR A PARTICULAR PURPOSE, unless the applicable written and signed contract terms specifically provide otherwise.

10 Revision history

Table 144. Document revision history

Date	Revision	Changes
16-May-2019	1	Initial release.
27-Mar-2023	2	Added reference to errata sheet ES0392 in *Section 1: Introduction*. *Figure 1: STM32H757xI block diagram*: changed APB1 and APB2 maximum frequency to 120 MHz, and WKUP[5:0] to WKUP[6:1]. Updated *Figure 5: STM32H757xI bus matrix.* Modified *Section 3.5.1: Power supply scheme.* Removed note to *Section 3.5.3: Voltage regulator (SMPS step-down converter and LDO).* Updated *Section 3.24: Digital camera interface (DCMI)* (modified supported format). Updated *Figure 13: Power supply scheme* (Backup domain and VDD domain blocks). Swapped 158 and 159 pin positions in *Table 8: LQFP176 pinout on page 58.* Added Full-duplex mode in *Section 3.35: Serial peripheral interfaces (SPI)/integrated interchip sound interfaces (I2S)*. Updated number of microphones that can be supported by the SAI in *Section 3.36: Serial audio interfaces (SAI)*. Removed FDCAN1_RXFD_MODE, FDCAN1_TXFD_MODE, FDCAN2_RXFD_MODE and FDCAN2_TXFD_MODE functions from *Table 8: STM32H750xB pin/ball definition* and all alternate function tables. Additional modifications made on *Table 8: STM32H750xB pin/ball definition*: – Added note to VDD50USB. – Added note to PB12 and PB13. – Change PB1 I/O structure to TT_A. – Replaced PI8 WKUP3 additional function by WKUP2. – Replaced PC13 WKUP2 additional function by WKUP3. Updated *Figure 43: Typical connection diagram when using the ADC with FT/TT pins featuring analog switch function.* Modified *Table 68: EMI characteristics for fHSE = 8 MHz and fCPU = 400 MHz.* Updated *Section 6.2: Absolute maximum ratings* introduction to device mission profile. Modified text in *Section : I/O static current consumption.* Changed f_{CPU2} to 100 MHz in *Table 123: General operating conditions*. Replaced Min V_{DD} by Min V_{DDLDO} in *Table 24: Supply voltage and maximum frequency configuration*. Removed note 1 from *Table 43: Typical and maximum current consumption in Stop, LDO regulator ON* and *Table 45: Typical and maximum current consumption in Sleep mode, LDO regulator*. Updated *Table 51: High-speed external user clock characteristics*. Updated U_{INST} min value in *Table 61: MIPI D-PHY characteristics.*

Table 144. Document revision history

Date	Revision	Changes
27-Mar-2023	2 (continued)	In Table 65: Flash memory programming: removed reference to single bank configuration in title and added $t_{ERASE128KB}$ typical and maximum values. Changed I_{leak} to I_{lkg} in Table 72: I/O static characteristics. Added reference to AN4899 in Section 6.3.18: I/O port characteristics. In Table 76: Output timing characteristics (HSLV ON): – modified conditions for t_r/t_f values (speeds 10 and 11) and F_{max} value (speed 11) – changed capacitance value for speed 10 and t_r/t_f, and speed for 11 and $t_r/t_f/F_{max}$ Table 76: Output timing characteristics (HSLV ON). Updated $t_{su(DV-CLKH)}/t_{h(DV-CLKH)}$ and $t_{su(NWAIT-CLKH)}/t_{h(NWAIT-CLKH)}$ in Table 86: Synchronous multiplexed NOR/PSRAM read timings. Changed $t_{(NWAIT-CLKH)}$ to $t_{su(NWAIT-CLKH)}$ and updated $t_{su(DV-CLKH)}/t_{h(DV-CLKH)}$ and $t_{su(NWAIT-CLKH)}/t_{h(NWAIT-CLKH)}$ in Table 88: Synchronous non-multiplexed NOR/PSRAM read timings. Updated $t_{su(SDCLKH_Data)}$ and $t_{h(SDCLKH_Data)}$ in Table 92: SDRAM read timings and Table 93: LPSDR SDRAM read timings. Replaced FMC_CLK by FMC_SDCLK in Section : SDRAM waveforms and timings. Updated $t_{s(IN)}$ and $t_{h(IN)}$ in Table 96: QUADSPI characteristics in SDR mode and $t_{sr(IN)}/t_{sf(IN)}$ and $t_{hr(IN)}/t_{hf(IN)}$ in Table 97: QUADSPI characteristics in DDR mode. Added reference to AN5354 application note in note of Table 99: ADC characteristics. Updated Figure 42: ADC accuracy characteristics and Figure 43: Typical connection diagram when using the ADC with FT/TT pins featuring analog switch function. Changed V_{DAC_OUT} maximum value to V_{REF+} −0.2 in Table 103: DAC accuracy. Updated T_L maximum value in Table 105: Temperature sensor characteristics Changed temperature condition to 130 °C for TS_CAL2 in Table 106: Temperature sensor calibration values Updated $DuCy_{CKOUT}$ in Table 113: DFSDM measured timing - 1.62-3.6 V. Updated Figure 51: USART timing diagram in SPI master mode and Figure 52: USART timing diagram in SPI slave mode. Updated Table 21: Current characteristics Updated Table 127: Dynamics characteristics: USB ULPI Updated $t_{su(MI)}$ and $t_{h(MI)}$ in Table 120: SPI dynamic characteristics. Updated V_{CORE} max value in Table 123: General operating conditions Updated t_{ISU}, t_{IH}, t_{ISUD}, t_{IHD} and t_{OH} in Table 124: Dynamics characteristics: SD / MMC characteristics, VDD = 2.7 to 3.6 V. Updated t_{ISU}, t_{IH} in Table 125: Dynamics characteristics: eMMC characteristics VDD = 1.71V to 1.9V Added *Section : USB OTG_FS characteristics*.

Table 144. Document revision history

Date	Revision	Changes
27-Mar-2023	2 (continued)	Added Figure 80: UFBGA169 - Footprint example and Table 140: UFBGA169 - Example of PCB design rules (0.5 mm pitch BGA). Updated Figure 79: UFBGA169 - Outline, Section 7.9: LQFP176 package information (1T), and Section 7.13: TFBGA240+25 package information. Modified title for footprint figures and PCB design rules tables (examples instead of recommendations) Added Section 7.1: Device marking (device marking information removed from package sections and moved to this section) Added note related to the availability of tape and reel packing in Section 8: Ordering information. Updated information on pin count in Section 8: Ordering information Added *Section 9: Important security notice*
19-Mar-2024	3	– Added SPI mode to USART on the cover page and in *Section 6.3.35: Communication interfaces*. – Updated *Figure 1: STM32H757xI block diagram*. – Updated *Table 8: STM32H757xI pin/ball definition*. – Updated *Section 3.33: Universal synchronous/asynchronous receiver transmitter (USART)*. – Updated *Section 3.4: Boot modes*. – Added note to *Section 6.2: Absolute maximum ratings*. – Updated *Table 23: General operating conditions*. – Updated *Figure 24: Typical application with a 32.768 kHz crystal*. – Updated *Table 33: Typical and maximum current consumption in Run mode, code with data processing running from ITCM for Arm Cortex-M7 and flash memory for Arm Cortex-M4, ART accelerator ON, SMPS regulator* and *Table 37: Typical and maximum current consumption in Run mode, code with data processing running from ITCM, only Arm Cortex-M7 running, SMPS regulator*. – Updated *Table 49: Peripheral current consumption in Run mode*. – Updated *Table 52: Low-speed external user clock characteristics*. – Updated *Table 59: PLL characteristics (wide VCO frequency range)*. – Updated *Figure 36: NAND controller waveforms for read access* and – Figure 37: NAND controller waveforms for write access. – Updated *Table 99: ADC characteristics*. – Updated *Table 119: USART (SPI mode) characteristics*, *Figure 51: USART timing diagram in SPI master mode*, and *Figure 52: USART timing diagram in SPI slave mode*. – Updated *Figure 53: SPI timing diagram - slave mode and CPHA = 0*, *Figure 54: SPI timing diagram - slave mode and CPHA = 1*, and *Figure 55: SPI timing diagram - master mode*. – Updated *Figure 58: SAI master timing waveforms* and *Figure 59: SAI slave timing waveforms*. – Updated pin count in *Section 8: Ordering information*.

Table 144. Document revision history

Date	Revision	Changes
25-Apr-2025	4	– In the context of I2C, replaced master and slave by controller and target, respectively. – Added ETH_TX_ER as alternate function for PA9 in *Table 8: STM32H757xI pin/ball definition*. – Added note on V_{IN} maximum value and updated formula (input voltage on FT_xxx pins) in *Table 20: Voltage characteristics*. – *Section 2: Description*: updated DAC peripheral and external signals in *Figure 1: STM32H757xI block diagram*. – *Section 5: Pinout, pin description and alternate functions*: added TIM12 to *Table 10: Port B alternate functions* and *Table 16: Port H alternate functions* (mapped to AF2). – Changed f_{PCLK2} into f_{HCLK} in *Section 6.3.23: 16-bit ADC characteristics*. – Updated *Section 7.3: UFBGA169 package information (A0YV)* and *Section 7.6: TFBGA240+25 package information (A07U)*.

IMPORTANT NOTICE – READ CAREFULLY

STMicroelectronics NV and its subsidiaries (“ST”) reserve the right to make changes, corrections, enhancements, modifications, and improvements to ST products and/or to this document at any time without notice. Purchasers should obtain the latest relevant information on ST products before placing orders. ST products are sold pursuant to ST’s terms and conditions of sale in place at the time of order acknowledgment.

Purchasers are solely responsible for the choice, selection, and use of ST products and ST assumes no liability for application assistance or the design of purchasers’ products.

No license, express or implied, to any intellectual property right is granted by ST herein.

Resale of ST products with provisions different from the information set forth herein shall void any warranty granted by ST for such product.

ST and the ST logo are trademarks of ST. For additional information about ST trademarks, refer to www.st.com/trademarks. All other product or service names are the property of their respective owners.

Information in this document supersedes and replaces information previously supplied in any prior versions of this document.

© 2025 STMicroelectronics – All rights reserved